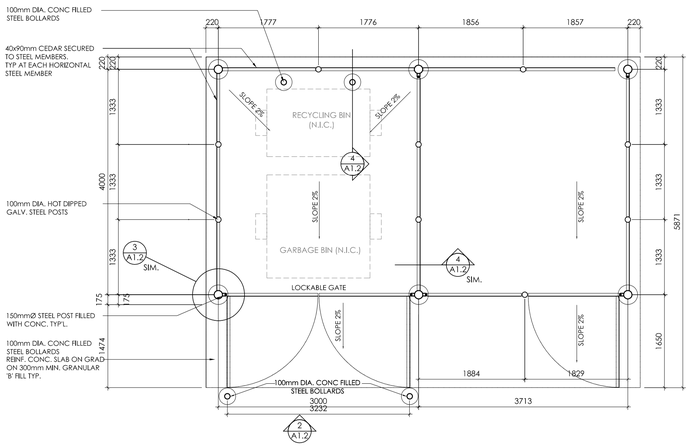

1 A1.2 CEDAR GARBAGE ENCLOSURE PLAN

0 500 1000 2000mm

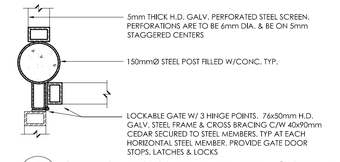

3 A1.2 GARBAGE ENCLOSURE - PLAN DETAIL @ GATE HINGE POINT

0 100 200 500mm

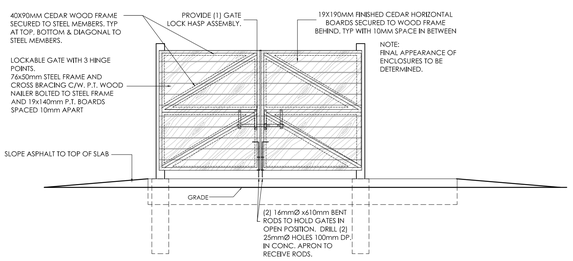

2 A1.2 CEDAR FENCE & GARBAGE ENCLOSURE FRONT ELEV.

0 500 1000 2000mm

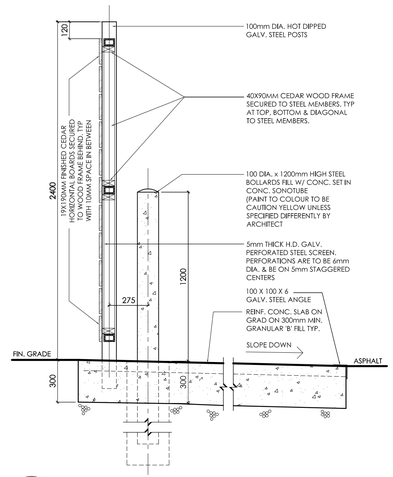

4 A1.2 GARBAGE ENCLOSURE SECTION

0 200 500 1000mm

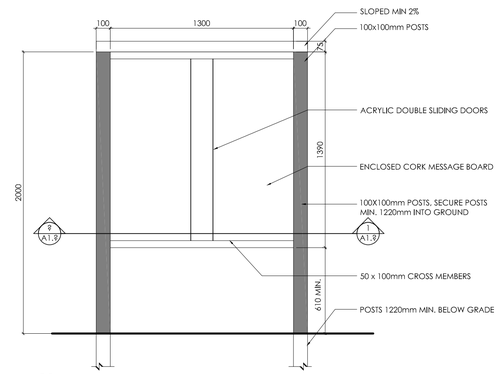

8 A1.2 TYP. PROJECT SIGN ELEVATION

0 200 500 1000mm

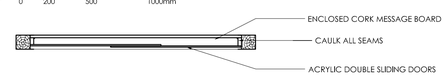

9 A1.2 SLIDING MESSAGE CENTER- ONE SIDE, TWO POSTS

0 200 500 1000mm

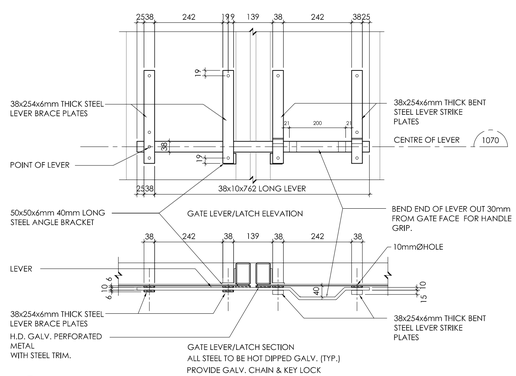

5 A1.2 GARBAGE ENCLOSURE - LATCH ELEV. & SECTION

0 100 200 500mm

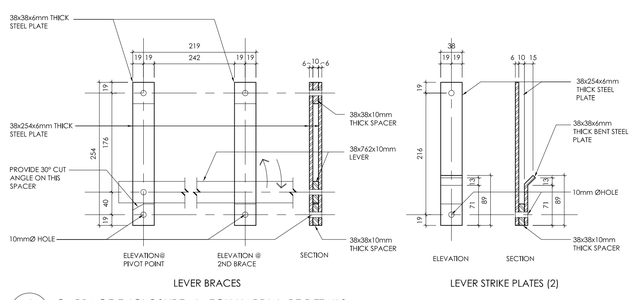

6 A1.2 GARBAGE ENCLOSURE - LATCH HARDWARE DETAILS

0 50 100 200mm

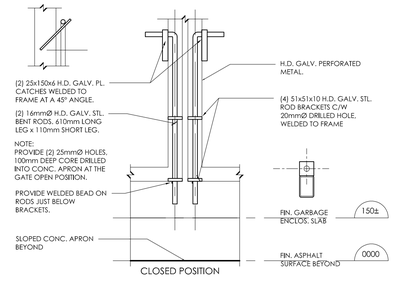

7 A1.2 GARBAGE ENCLOSURE - RODS - INTERIOR ELEV. DETAIL

0 100 200 500mm

REVISIONS

NO.	DATE	PARTICULAR
1	2017.08.21	ISSUED FOR BUILDING PERMIT & TENDER
2	2017.08.22	ISSUED FOR CLIENT REVIEW
3	2017.10.06	ISSUED FOR CLIENT REVIEW
4	2017.10.12	ISSUED FOR TENDER

NOTES:

PRELIMINARY
NOT TO BE USED FOR CONSTRUCTION

Reproduction of drawings and related documents in whole or in part is forbidden without written permission of The Ventin Group.

All dimensions and measurements must be checked and verified by the General Contractor

CLIENT:
TOWNSHIP OF McNAB / BRAESIDE

PROJECT:
21688

McNAB BRAESIDE MUNICIPAL BUILDING

2473 RUSSETT DRIVE, ARNPRIOR, ONTARIO K7S 3G8

ORIGINAL PAGE SIZE ARCH D - 24" x 36"

KEY TO DETAIL LOCATION:
A - DETAIL NO.
B - DETAIL NO. ORIGIN

+VG ARCHITECTS
THE VENTIN GROUP LTD

CN
N

SITE PLAN DETAILS

A1.2

DRAWN BY : XX
CHECKED BY : XX

Plot Date: Oct 12, 2017 - 12:06pm By: User
Filename: V:\+VG Ottawa Project Files\1633 McNab Braeside\02_Working Drawings\02 Xref\A1.2 SITE DETAILS.dwg