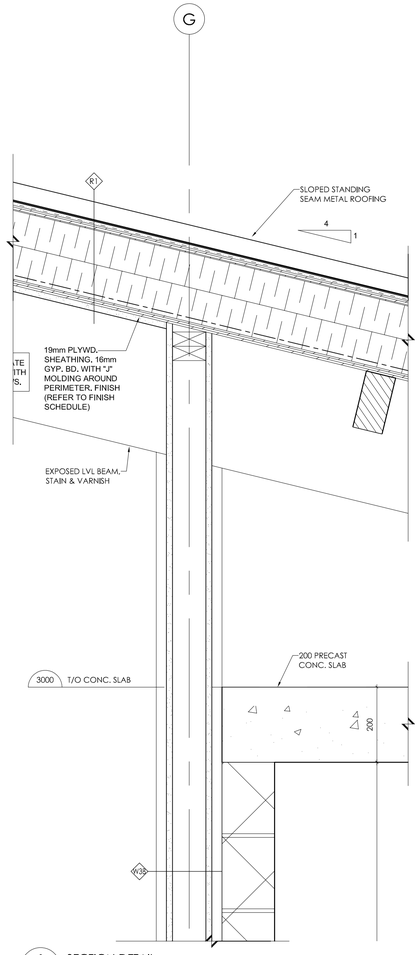

1 SECTION DETAIL A4.3A
0 100 200 300mm

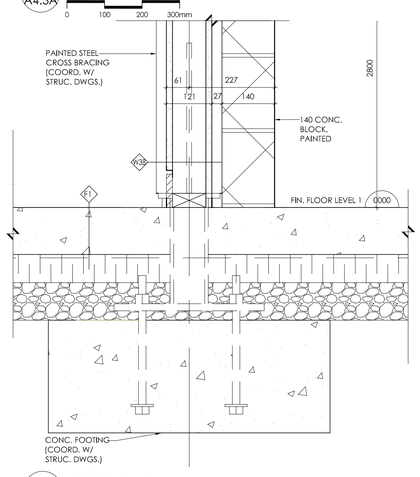

2 SECTION DETAIL A4.3A
0 100 200 300mm

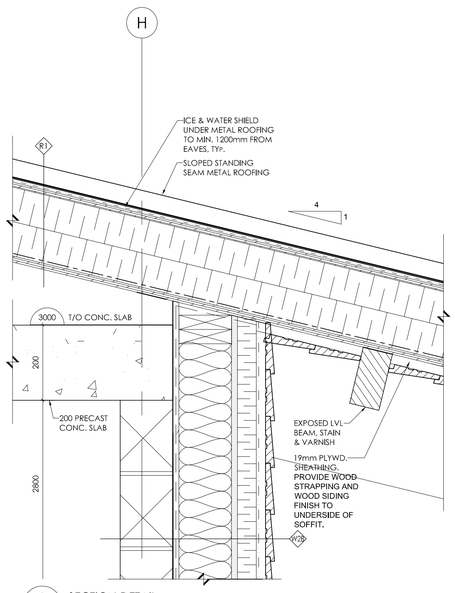

3 SECTION DETAIL A4.3A
0 100 200 300mm

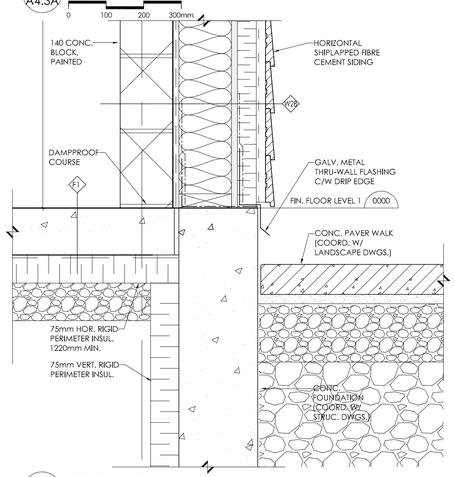

4 SECTION DETAIL A4.3A
0 100 200 300mm

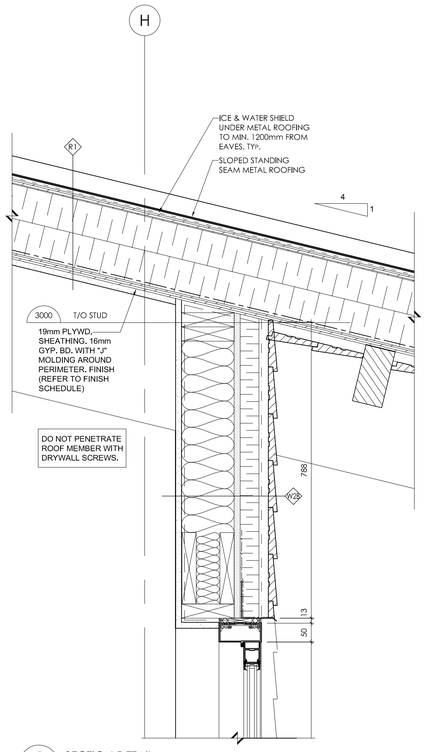

5 SECTION DETAIL A4.3A
0 100 200 300mm

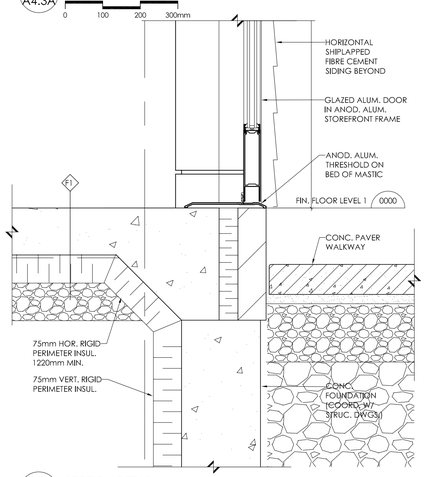

6 SECTION DETAIL A4.3A
0 100 200 300mm

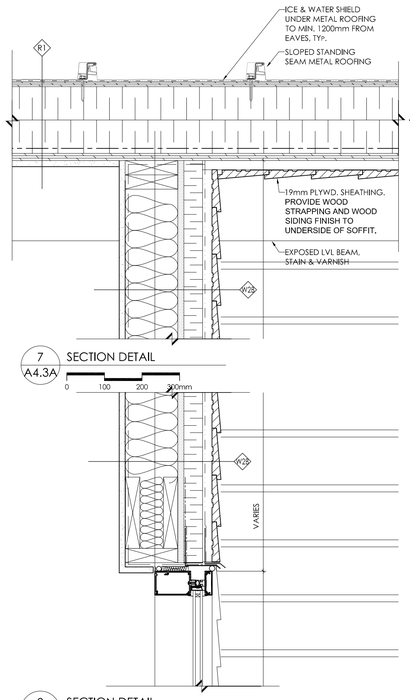

7 SECTION DETAIL A4.3A
0 100 200 300mm

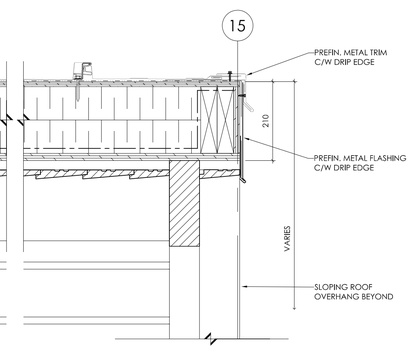

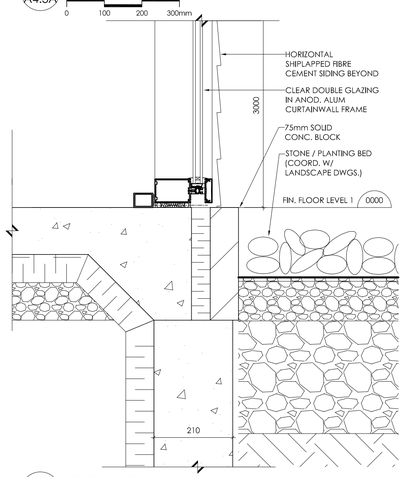

8 SECTION DETAIL A4.3A
0 100 200 300mm

9 SECTION DETAIL A4.3A
0 100 200 300mm

REVISIONS

NO.	DATE	PARTICULAR
1	2017.08.21	ISSUED FOR BUILDING PERMIT & TENDER
2	2017.08.22	ISSUED FOR CLIENT REVIEW
3	2017.10.06	ISSUED FOR CLIENT REVIEW
4	2017.10.12	ISSUED FOR TENDER

NOTES:

PRELIMINARY
NOT TO BE USED FOR CONSTRUCTION

Reproduction of drawings and related documents in whole or in part is forbidden without written permission of The Ventin Group.

All dimensions and measurements must be checked and verified by the General Contractor

CLIENT:
TOWNSHIP OF McNAB / BRAESIDE

PROJECT:
21688

McNAB / BRAESIDE MUNICIPAL BUILDING

2473 RUSSETT DRIVE, ARNPRIOR, ONTARIO K7S 3G8

ORIGINAL PAGE SIZE ARCH D - 24" x 36"

KEY TO DETAIL LOCATION:
A - DETAIL NO.
B - DETAIL NO. ORIGIN

+VG ARCHITECTS
THE VENTIN GROUP LTD

SECTION DETAILS

A4.3A

DRAWN BY : SR CHECKED BY : PV

Plot Date: Oct 12, 2017 - 11:58am By: User Filename: C:\Users\User\AppData\Local\Temp\Temp1_M&B Town Hall - A4.1-3 - Section Details - Standard.zip\M&B Town Hall - A4.1-3 - Section Details.dwg