CONT. ON PAGE A4.4

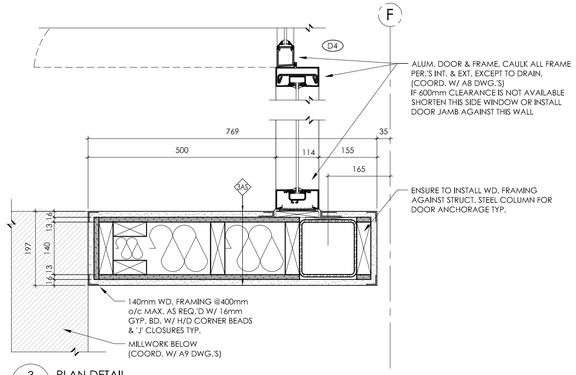


3 A4.5 PLAN DETAIL

0 100 200 300mm

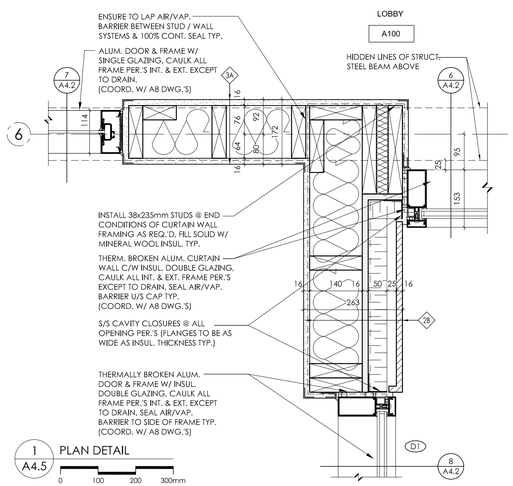


1 A4.5 PLAN DETAIL

0 100 200 300mm

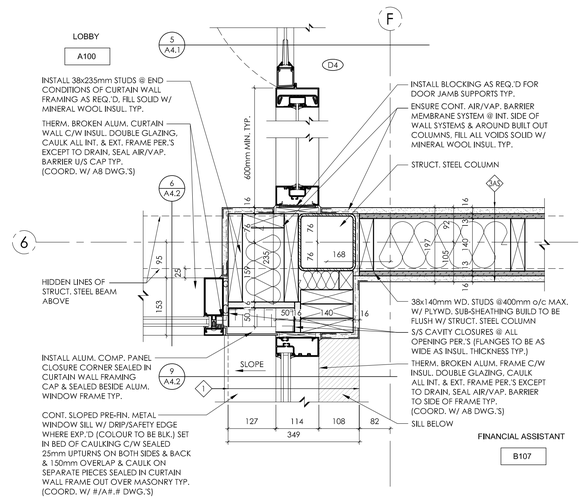


4 A4.5 PLAN DETAIL

0 100 200 300mm

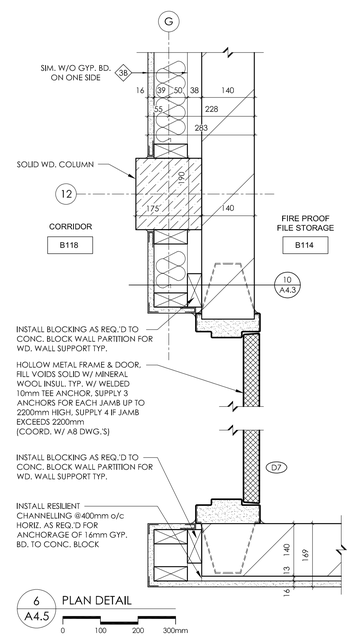


6 A4.5 PLAN DETAIL

0 100 200 300mm

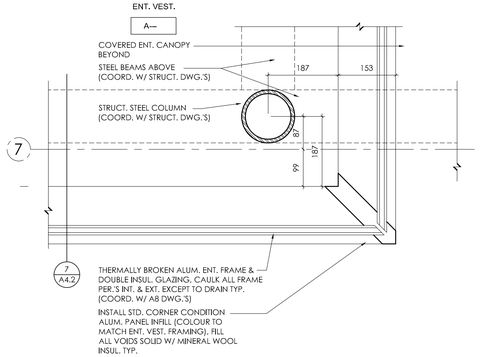


2 A4.5 PLAN DETAIL

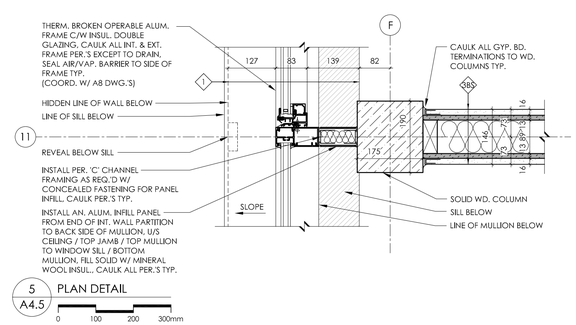


5 A4.5 PLAN DETAIL

0 100 200 300mm

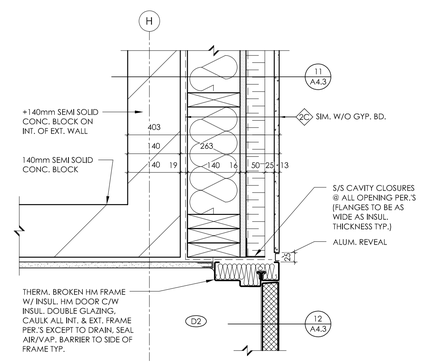


7 A4.5 PLAN DETAIL

0 100 200 300mm

**REVISIONS**

| NO. | DATE | PARTICULAR |
|---|---|---|
| 1 | 2017.08.21 | ISSUED FOR BUILDING PERMIT & TENDER |
| 2 | 2017.08.22 | ISSUED FOR CLIENT REVIEW |
| 3 | 2017.10.06 | ISSUED FOR CLIENT REVIEW |
| 4 | 2017.10.12 | ISSUED FOR TENDER |

**NOTES:**

All dimensions and measurements must be checked and verified by the General Contractor

Reproduction of drawings and related documents in whole or in part is forbidden without written permission of The Ventin Group.

**PRELIMINARY**
NOT TO BE USED FOR CONSTRUCTION

**CLIENT:**
TOWNSHIP OF McNAB / BRAESIDE

**PROJECT:**
21688

McNAB / BRAESIDE MUNICIPAL BUILDING

2473 RUSSETT DRIVE, ARNPRIOR, ONTARIO K7S 3G8

ORIGINAL PAGE SIZE ARCH D - 24" x 36"

KEY TO DETAIL LOCATION:
A - DETAIL NO.
B - DETAIL NO. ORIGIN

+VG ARCHITECTS
THE VENTIN GROUP LTD

PLAN DETAILS

A4.5

DRAWN BY : DD / JS CHECKED BY : XX

Plot Date: Oct 12, 2017 - 12:01pm By: User Filename: C:\Users\User\AppData\Local\Temp\Temp1_A&B Town Hall - A4.4-5 - Plan Details - Standard.zip\A&B Town Hall - A4.4-5 - Plan Details.dwg