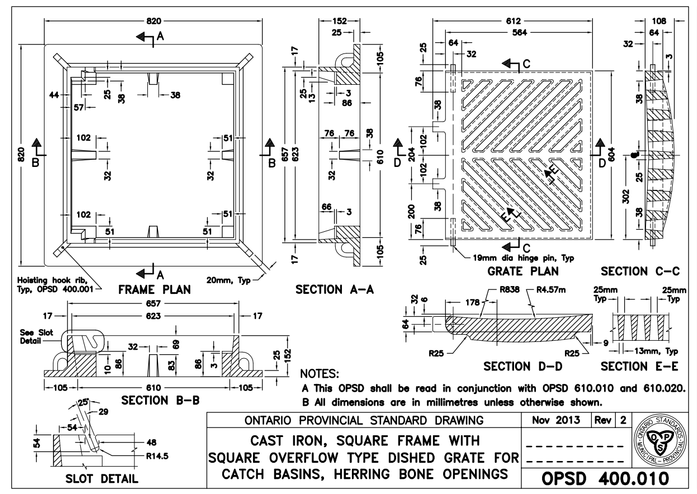

NOTES:
A This OPSD shall be read in conjunction with OPSD 610.010 and 610.020.
B All dimensions are in millimetres unless otherwise shown.

ONTARIO PROVINCIAL STANDARD DRAWING	Nov 2013	Rev 2
CAST IRON, SQUARE FRAME WITH SQUARE OVERFLOW TYPE DISHED GRATE FOR CATCH BASINS, HERRING BONE OPENINGS		OPSD 400.010

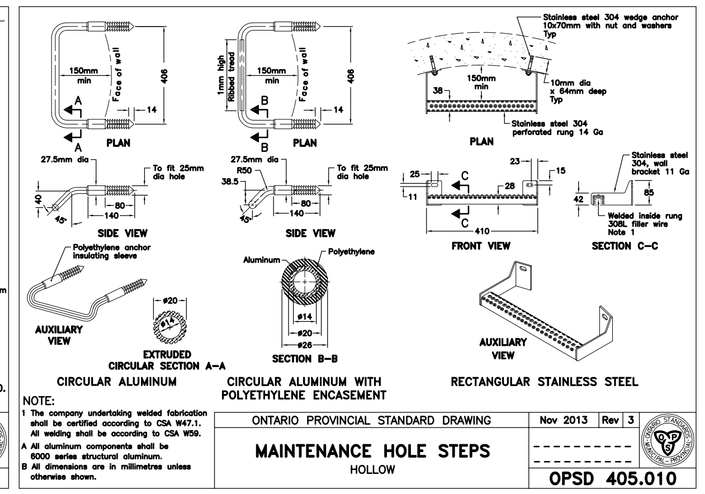

NOTE:
1 The company undertaking welded fabrication shall be certified according to CSA W47.1. All welding shall be according to CSA W59.
A All aluminum components shall be 6000 series structural aluminum.
B All dimensions are in millimetres unless otherwise shown.

ONTARIO PROVINCIAL STANDARD DRAWING	Nov 2013	Rev 3
MAINTENANCE HOLE STEPS HOLLOW		OPSD 405.010

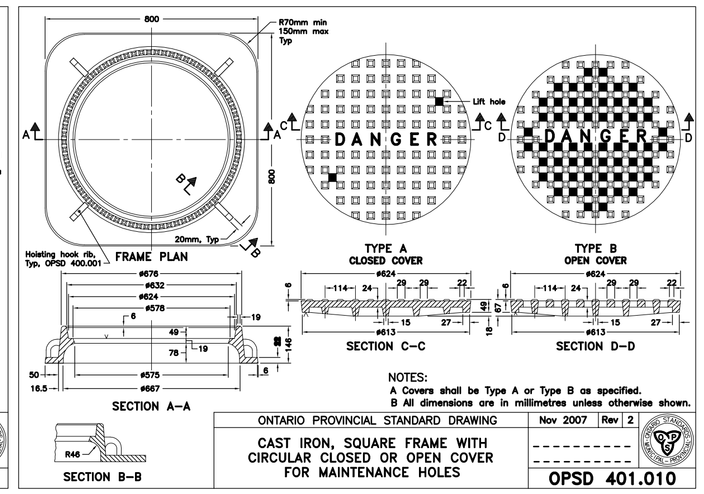

NOTES:
A Covers shall be Type A or Type B as specified.
B All dimensions are in millimetres unless otherwise shown.

ONTARIO PROVINCIAL STANDARD DRAWING	Nov 2007	Rev 2
CAST IRON, SQUARE FRAME WITH CIRCULAR CLOSED OR OPEN COVER FOR MAINTENANCE HOLES		OPSD 401.010

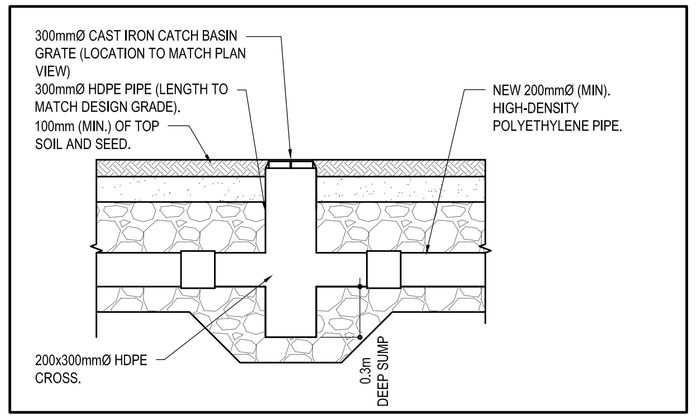

1 C1.4 TYPICAL PE CATCH BASIN DETAIL
SCALE: N.T.S.

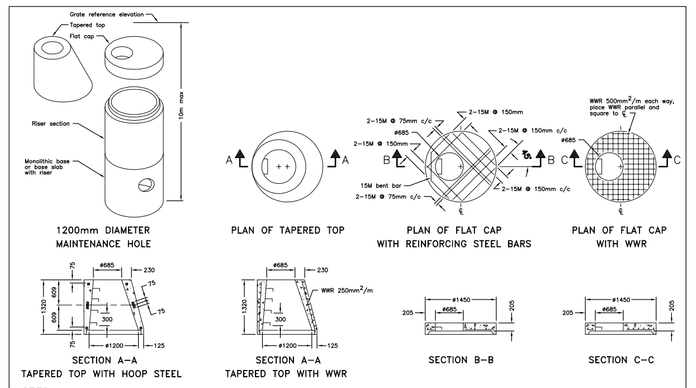

NOTES:
A This drawing shall be read in conjunction with OPSD 701.031 and 701.032.
B Centre reinforcing steel in riser ±20mm. All other reinforcing steel shall have 25mm minimum cover.
C Steps shall be according to OPSD 405.010 or 405.020.
D All dimensions are nominal.
E All dimensions are in millimetres unless otherwise shown.

ONTARIO PROVINCIAL STANDARD DRAWING	Nov 2009	Rev 3
PRECAST CONCRETE MAINTENANCE HOLE COMPONENTS 1200mm DIAMETER TAPERED TOP AND FLAT CAP		OPSD 701.030

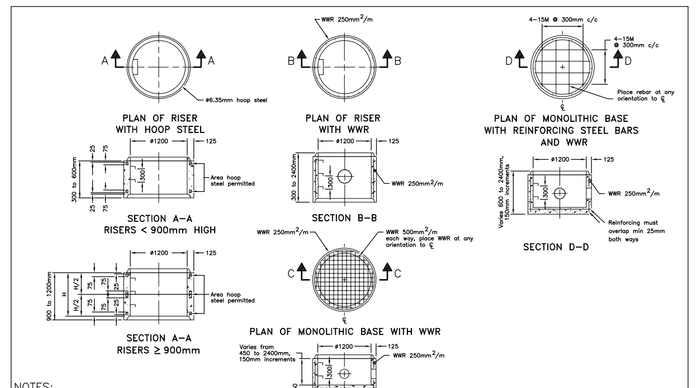

NOTES:
A This drawing shall be read in conjunction with OPSD 701.030 and 701.032.
B Centre reinforcing steel in riser ±20mm. All other reinforcing steel shall have 25mm minimum cover.
C Steps shall be according to OPSD 405.010 or 405.020.
D All dimensions are nominal.
E All dimensions are in millimetres unless otherwise shown.

ONTARIO PROVINCIAL STANDARD DRAWING	Nov 2009	Rev 1
PRECAST CONCRETE MAINTENANCE HOLE COMPONENTS 1200mm DIAMETER RISER AND MONOLITHIC BASE		OPSD 701.031

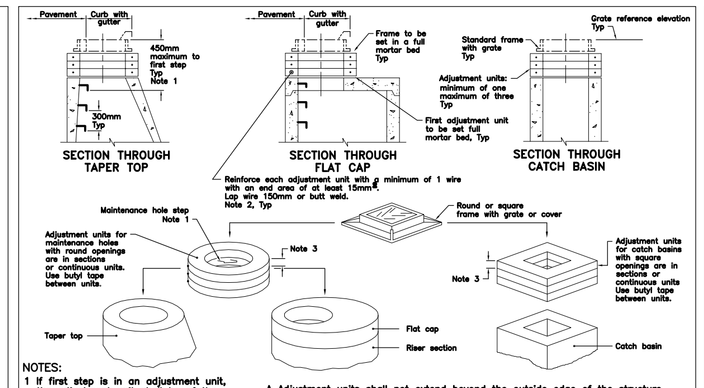

NOTES:
1 If first step is in an adjustment unit, the adjustment unit shall be of the type manufactured with a step in place.
2 Centre reinforcing in adjustment unit ±10mm.
3 Round and square adjustment unit thicknesses: 50, 75, 100, 150, and 300mm.
A Adjustment units shall not extend beyond the outside edge of the structure.
B All dimensions are in millimetres unless otherwise shown.

ONTARIO PROVINCIAL STANDARD DRAWING	Nov 2009	Rev 2
PRECAST CONCRETE ADJUSTMENT UNITS FOR MAINTENANCE HOLES, CATCH BASINS, AND VALVE CHAMBERS		OPSD 704.010

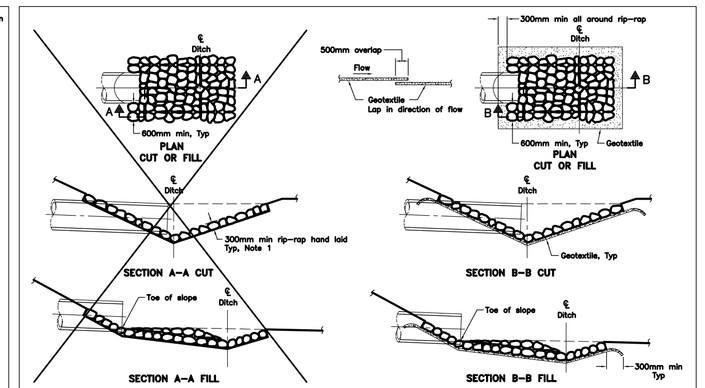

NOTES:
1 The thickness of the rip-rap layer shall be at least 1.5 times the rip-rap mean diameter.
A All dimensions are in millimetres unless otherwise shown.

ONTARIO PROVINCIAL STANDARD DRAWING	Nov 2007	Rev 1
RIP-RAP TREATMENT FOR SEWER AND CULVERT OUTLETS		OPSD 810.010

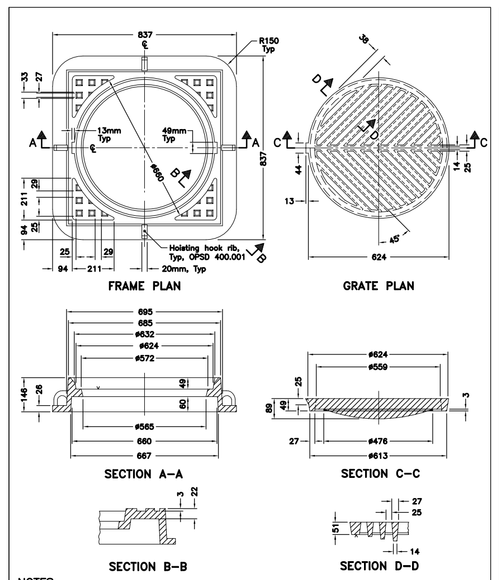

NOTES:
A All dimensions are in millimetres unless otherwise shown.

ONTARIO PROVINCIAL STANDARD DRAWING	Nov 2013	Rev 4
CAST IRON, RAISED SQUARE FRAME WITH CIRCULAR FLAT GRATE FOR CATCH BASINS, HERRING BONE OPENINGS		OPSD 400.070

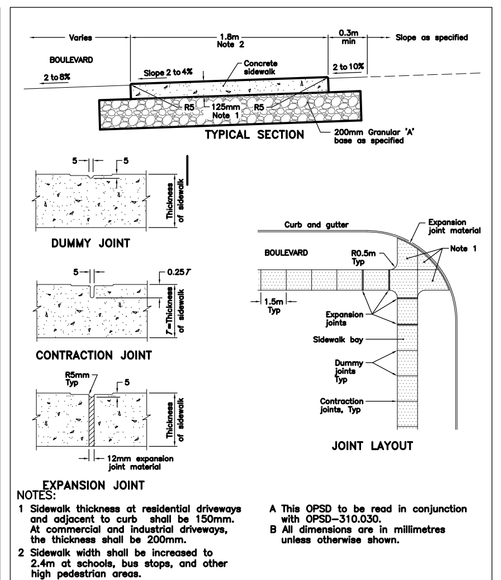

NOTES:
1 Sidewalk thickness at residential driveways and adjacent to curb shall be 150mm. At commercial and industrial driveways, the thickness shall be 200mm.
2 Sidewalk width shall be increased to 2.4m at schools, bus stops, and other high pedestrian areas.
A This OPSD to be read in conjunction with OPSD–310.030.
B All dimensions are in millimetres unless otherwise shown.

ONTARIO PROVINCIAL STANDARD DRAWING	Nov 2005	Rev 1
CONCRETE SIDEWALK		OPSD – 310.010M

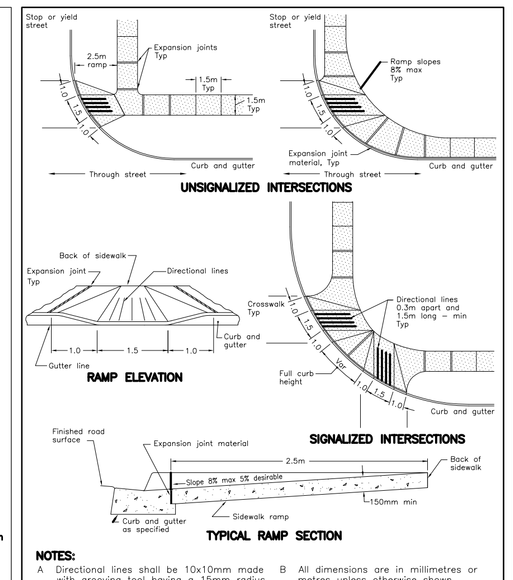

NOTES:
1 At commercial and industrial driveways, the thickness shall be 200mm.
2 Sidewalk width shall be increased to:
– 1.8m on major roadways
– 2.4m at schools, bus stops, and other high pedestrian areas.
A This OPSD to be read in conjunction with OPSD–310.030.
B All dimensions are in millimetres unless otherwise shown.

ONTARIO PROVINCIAL STANDARD DRAWING	Nov 2005	Rev 1
CONCRETE SIDEWALK ADJACENT TO BARRIER GUTTER		OPSD – 310.020M

NOTES:
A Directional lines shall be 10x10mm made with grooving tool having a 15mm radius.
B All dimensions are in millimetres or metres unless otherwise shown.

ONTARIO PROVINCIAL STANDARD DRAWING	1993 10 01	Rev
CONCRETE SIDEWALK RAMPS AT INTERSECTIONS	Date	OPSD – 310.030

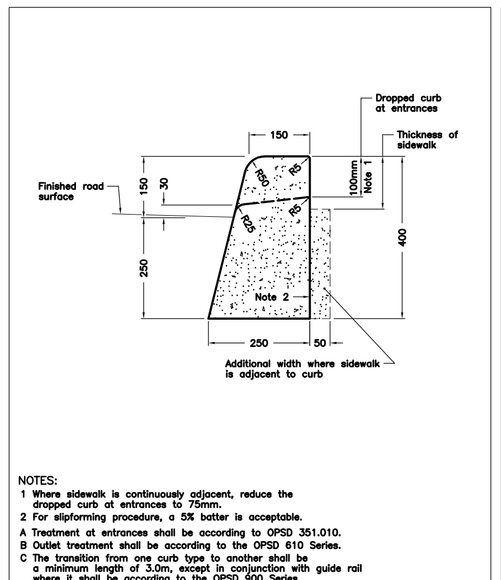

NOTES:
1 Where sidewalk is continuously adjacent, reduce the dropped curb at entrances to 75mm.
2 For slipforming procedure, a 5% batter is acceptable.
A Treatment at entrances shall be according to OPSD 351.010.
B Outlet treatment shall be according to the OPSD 610 Series.
C The transition from one curb type to another shall be a minimum length of 3.0m, except in conjunction with guide rail where it shall be according to the OPSD 600 Series.
D All dimensions are in millimetres unless otherwise shown.

ONTARIO PROVINCIAL STANDARD DRAWING	Nov 2006	Rev 1
CONCRETE BARRIER CURB		OPSD 600.110

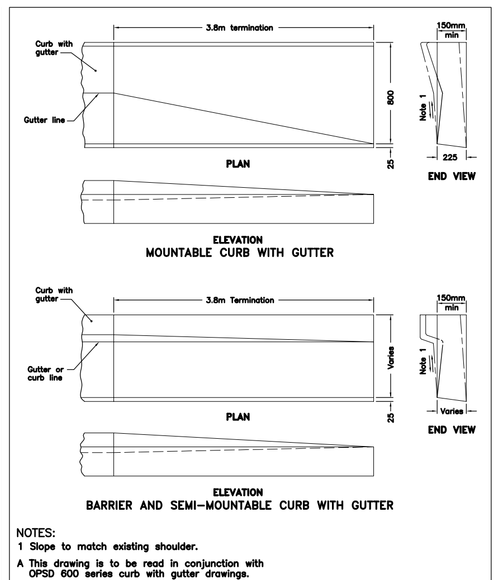

NOTES:
1 Slope to match existing shoulder.
A This drawing is to be read in conjunction with OPSD 600 series curb with gutter drawings.
B All dimensions are in millimetres unless otherwise shown.

ONTARIO PROVINCIAL STANDARD DRAWING	Nov 2006	Rev 1
METHOD OF TERMINATION FOR CONCRETE CURB WITH GUTTER		OPSD 608.010

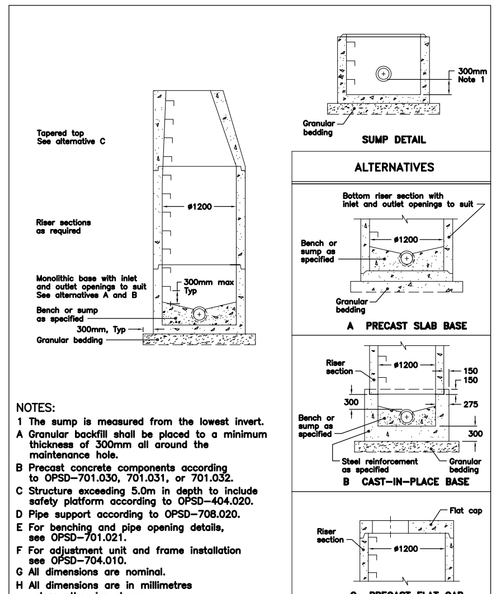

NOTES:
1 The sump is measured from the lowest invert.
A Granular backfill shall be placed to a minimum thickness of 300mm all around the maintenance hole.
B Precast concrete components according to OPSD–701.030, 701.031, or 701.032.
C Structure exceeding 5.0m in depth to include safety platform according to OPSD–404.020.
D Pipe support according to OPSD–708.020.
E For benching and pipe opening details, see OPSD–701.021.
F For adjustment unit and frame installation see OPSD–704.010.
G All dimensions are nominal.
H All dimensions are in millimetres unless otherwise shown.

ONTARIO PROVINCIAL STANDARD DRAWING	Nov 2004	Rev 3
PRECAST CONCRETE MAINTENANCE HOLE 1200mm DIAMETER		OPSD – 701.010

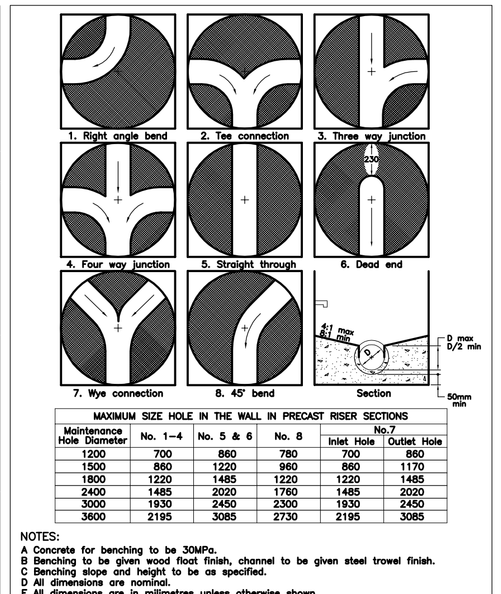

MAXIMUM SIZE HOLE IN THE WALL IN PRECAST RISER SECTIONS

Maintenance Hole Diameter	No. 1–4	No. 5 & 6	No. 8	No. 7 Inlet Hole	No. 7 Outlet Hole
1200	700	860	780	700	860
1500	860	1220	960	860	1170
1800	1220	1485	1220	1220	1485
2400	1485	2020	1760	1485	2020
3000	1930	2450	2300	1930	2450
3600	2195	3085	2730	2195	3085

NOTES:
A Concrete for benching to be 30MPa.
B Benching to be given wood float finish, channel to be given steel trowel finish.
C Benching slope and height to be as specified.
D All dimensions are nominal.
E All dimensions are in millimetres unless otherwise shown.

ONTARIO PROVINCIAL STANDARD DRAWING	Nov 2004	Rev 2
MAINTENANCE HOLE BENCHING AND PIPE OPENING DETAILS		OPSD – 701.021

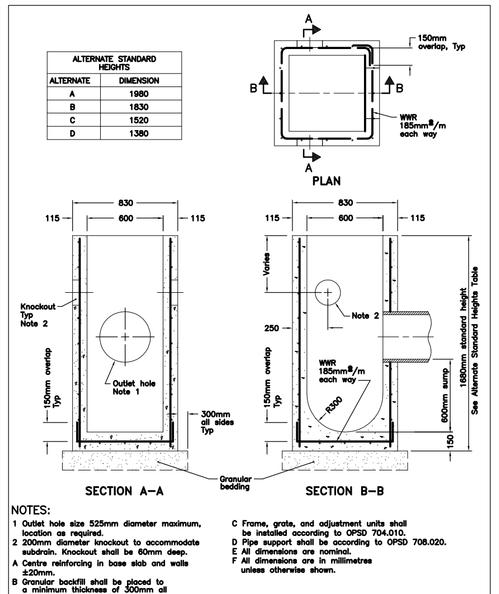

NOTES:
1 Outlet hole size 525mm diameter maximum, location as required.
2 200mm diameter knockout to accommodate subdrain. Knockout shall be 60mm deep.
A Centre reinforcing in base slab and walls ±20mm.
B Granular backfill shall be placed to a minimum thickness of 300mm all around the catch basin.
C Frame, grate, and adjustment units shall be installed according to OPSD 704.010.
D Pipe support shall be according to OPSD 708.020.
E All dimensions are nominal.
F All dimensions are in millimetres unless otherwise shown.

ONTARIO PROVINCIAL STANDARD DRAWING	Nov 2009	Rev 2
PRECAST CONCRETE CATCH BASIN 600x600mm		OPSD 705.010

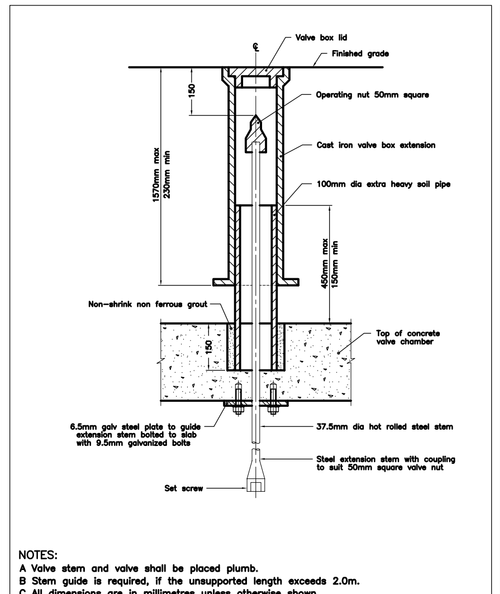

NOTES:
A Valve stem and valve shall be placed plumb.
B Stem guide is required, if the unsupported length exceeds 2.0m.
C All dimensions are in millimetres unless otherwise shown.

ONTARIO PROVINCIAL STANDARD DRAWING	Nov 2006	Rev 1
VALVE OPERATOR		OPSD 1101.020

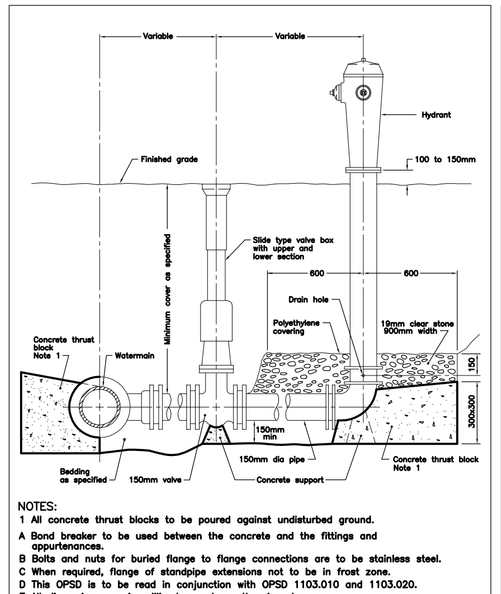

NOTES:
1 All concrete thrust blocks to be poured against undisturbed ground.
A Bond breaker to be used between the concrete and the fittings and appurtenances.
B Bolts and nuts for buried flange to flange connections are to be stainless steel.
C When required, flange of standpipe extensions not to be in frost zone.
D This OPSD is to be read in conjunction with OPSD 1103.010 and 1103.020.
E All dimensions are in millimetres unless otherwise shown.

ONTARIO PROVINCIAL STANDARD DRAWING	Nov 2006	Rev 1
HYDRANT INSTALLATION		OPSD 1105.010

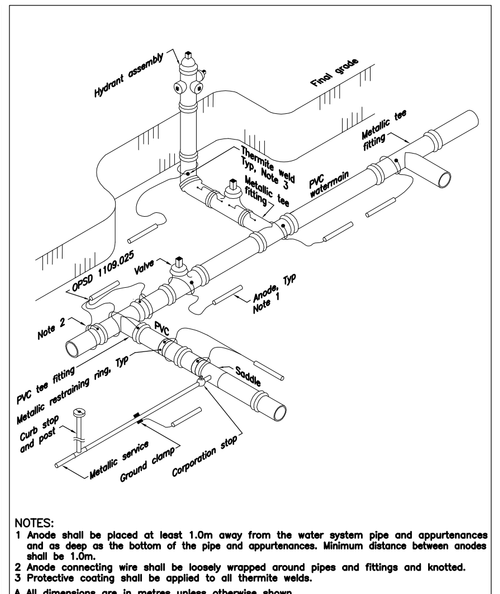

NOTES:
1 Anode shall be placed at least 1.0m away from the water system pipe and appurtenances and as deep as the bottom of the pipe and appurtenances. Minimum distance between anodes shall be 1.0m.
2 Anode connecting wire shall be loosely wrapped around pipes and fittings and knotted.
3 Protective coating shall be applied to all thermite welds.
A All dimensions are in metres unless otherwise shown.

ONTARIO PROVINCIAL STANDARD DRAWING	Nov 2008	Rev 1
CATHODIC PROTECTION FOR PVC WATERMAIN SYSTEMS		OPSD 1109.011

WSP
1345 ROSEMOUNT AVENUE
CORNWALL, ONTARIO
CANADA K6J 3E5
PHONE: 613-933-5602 FAX: 613-936-0335
WWW.WSPGROUP.COM

CONSULTANT:

SEAL:
LICENSED PROFESSIONAL ENGINEER
J. R. EAMON
100013241
May 8, 2015
PROVINCE OF ONTARIO

CLIENT:

CLIENT REF. #:

PROJECT:

LONG SAULT VILLA
PROPOSED NEW LINKED BUILDING

KEY PLAN:

DISCLAIMER: COPYRIGHT:
THIS DRAWING AND DESIGN IS COPYRIGHT PROTECTED WHICH SHALL NOT BE USED, REPRODUCED OR REVISED WITHOUT WRITTEN PERMISSION BY WSP. THE CONTRACTOR SHALL CHECK AND VERIFY ALL DIMENSIONS AND UTILITY LOCATIONS AND REPORT ALL ERRORS AND OMISSIONS PRIOR TO COMMENCING WORK.
THIS DRAWING IS NOT TO BE SCALED.

ISSUED FOR - REVISION:

IS	RE	DATE	DESCRIPTION
2		2015/05/08	ISSUED FOR CONSTRUCTION
1		2014/10/27	ISSUED FOR SITE PLAN CONTROL

PROJECT NO: 141-21584-00
DATE: 2014/10/27
ORIGINAL SCALE: AS SHOWN
IF THIS BAR IS NOT 25mm LONG, ADJUST YOUR PLOTTING SCALE. 25mm
DESIGNED BY: J.E.
DRAWN BY: K.B.W.
CHECKED BY: J.E.
DISCIPLINE: CIVIL

TITLE:
O.P.S.D.'S & DETAILS

SHEET NUMBER: C1.4
SHEET #: 4 OF 4

ISSUE: ISSUED FOR CONSTRUCTION
REV #: 0
DATE OF: 2015/05/08

M:\2014\141\21584\00 - Long Sault Villa\Dwgs\Main\141-21584-00-C1.3-4.dwg May 08, 2015-10:45am BY:(Ken Wilkie)