EXIST. PANEL '202'

PNL. LOCATION	2ND FL WING
VOLTAGE	120/208V
PHASE	3ø, 4W
POLES	42
RATING AMPS	225A
TRIM	FLUSH
MAIN BKR	N/R
BRANCH BKRS	BOLT ON

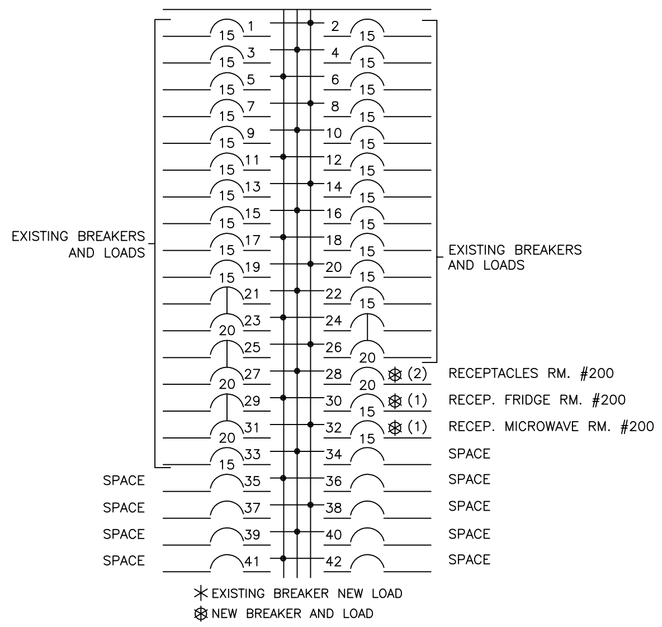

EXIST. PANEL '3A'

PNL. LOCATION	3RD FL WING
VOLTAGE	120/208V
PHASE	3ø, 4W
POLES	24
RATING AMPS	125A
TRIM	FLUSH
MAIN BKR	N/R
BRANCH BKRS	BOLT ON

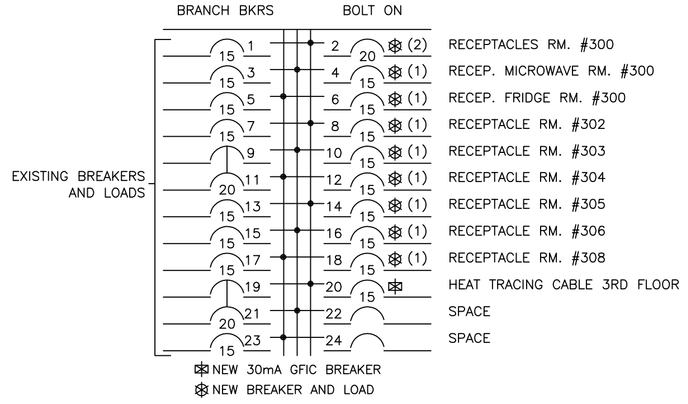

NEW PANEL '3F'

PNL. LOCATION	3RD FL WING
VOLTAGE	120/208V
PHASE	3ø, 4W
POLES	42
RATING AMPS	225A
TRIM	FLUSH
MAIN BKR	N/R
BRANCH BKRS	BOLT ON

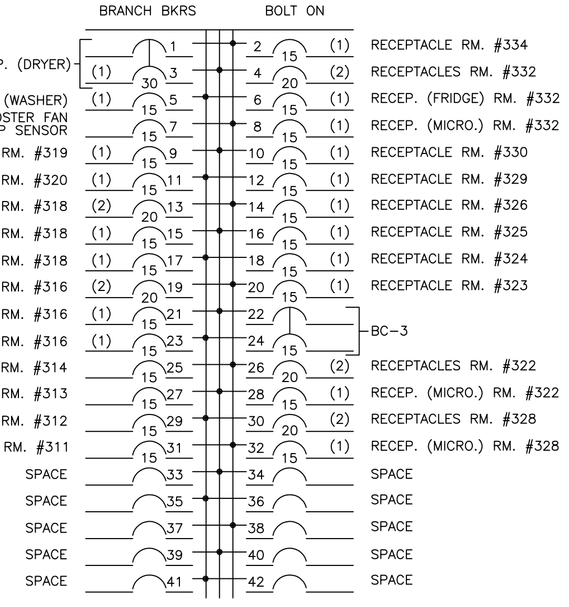

EXIST. PANEL '205'

PNL. LOCATION	2ND FL WING
VOLTAGE	120/208V
PHASE	3ø, 4W
POLES	42
RATING AMPS	225A
TRIM	FLUSH
MAIN BKR	N/R
BRANCH BKRS	BOLT ON

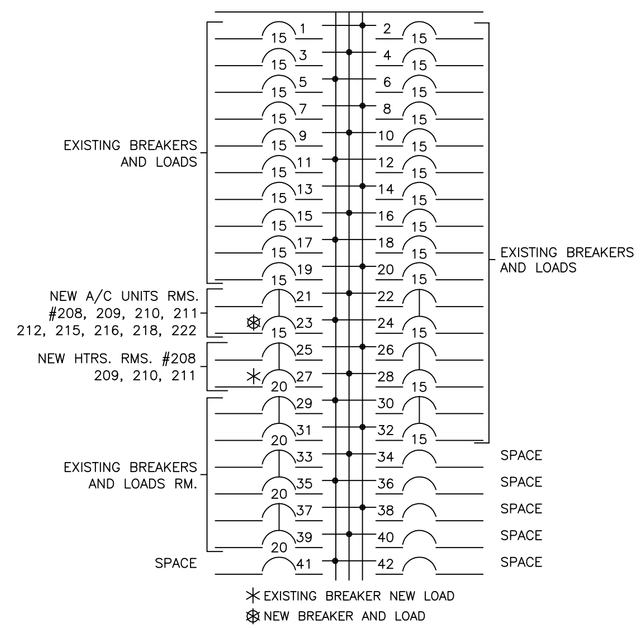

EXIST. PANEL '3B'

PNL. LOCATION	3RD FL WING
VOLTAGE	120/208V
PHASE	3ø, 4W
POLES	66
RATING AMPS	225A
TRIM	FLUSH
MAIN BKR	N/R
BRANCH BKRS	BOLT ON

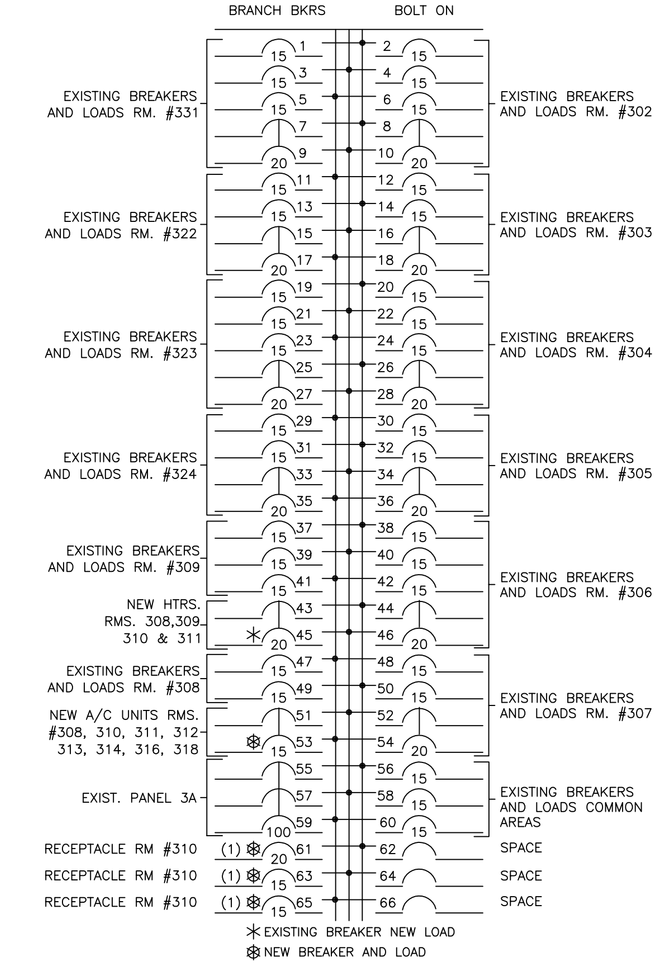

EXIST. PANEL 'E2'

PNL. LOCATION	2ND FL WING
VOLTAGE	120/208V
PHASE	3ø, 4W
POLES	66
RATING AMPS	225A
TRIM	FLUSH
MAIN BKR	N/R
BRANCH BKRS	BOLT ON

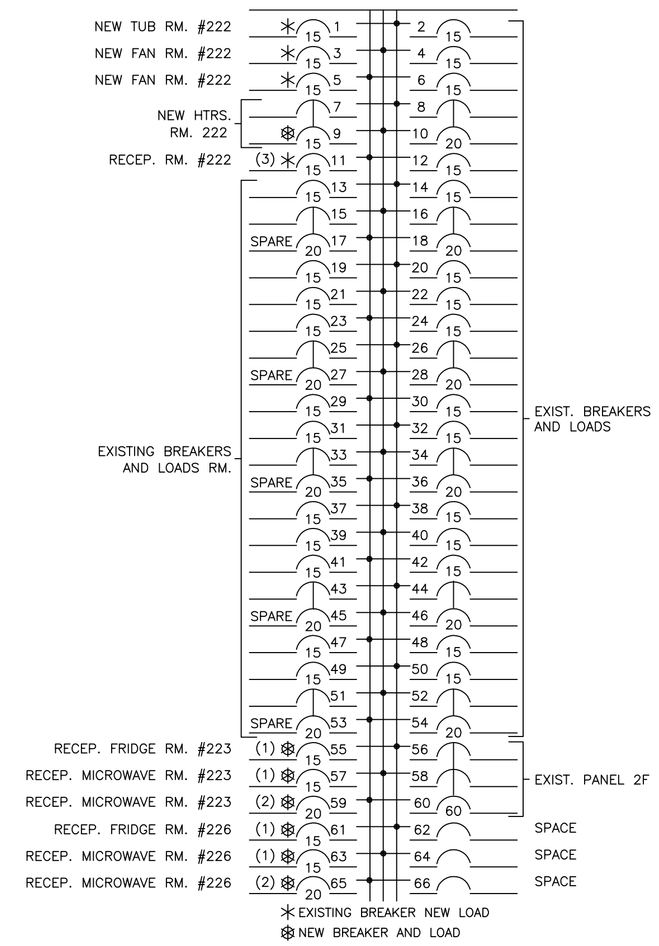

EXIST. PANEL '3C'

PNL. LOCATION	3RD FL WING
VOLTAGE	120/208V
PHASE	3ø, 4W
POLES	66
RATING AMPS	225A
TRIM	FLUSH
MAIN BKR	N/R
BRANCH BKRS	BOLT ON

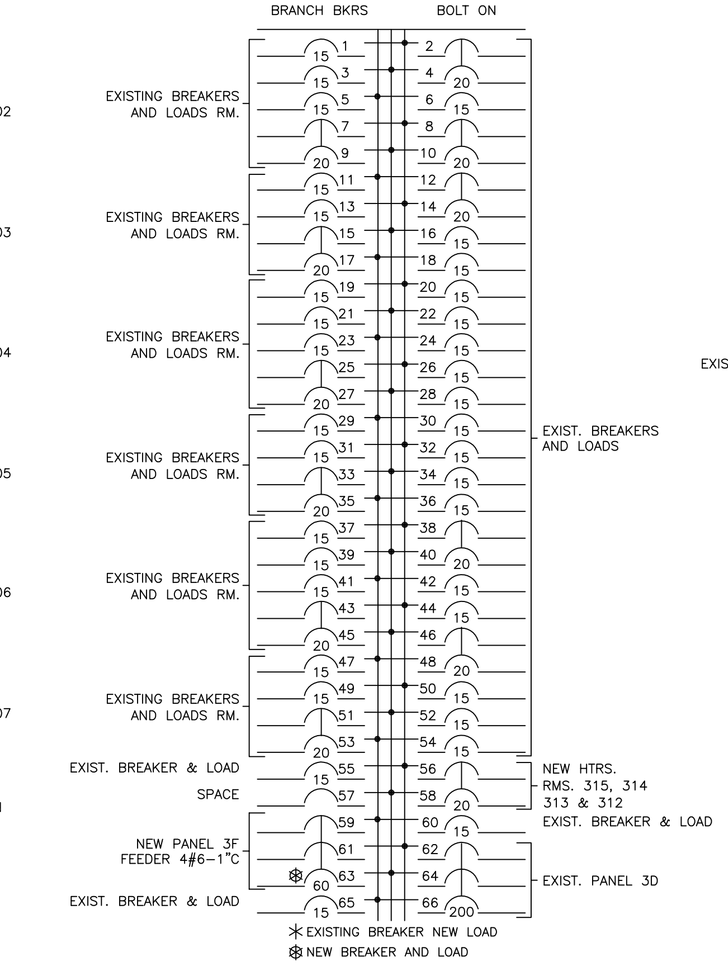

EXIST. PANEL '213'

PNL. LOCATION	2ND FL WING
VOLTAGE	120/208V
PHASE	3ø, 4W
POLES	42
RATING AMPS	225A
TRIM	FLUSH
MAIN BKR	N/R
BRANCH BKRS	BOLT ON

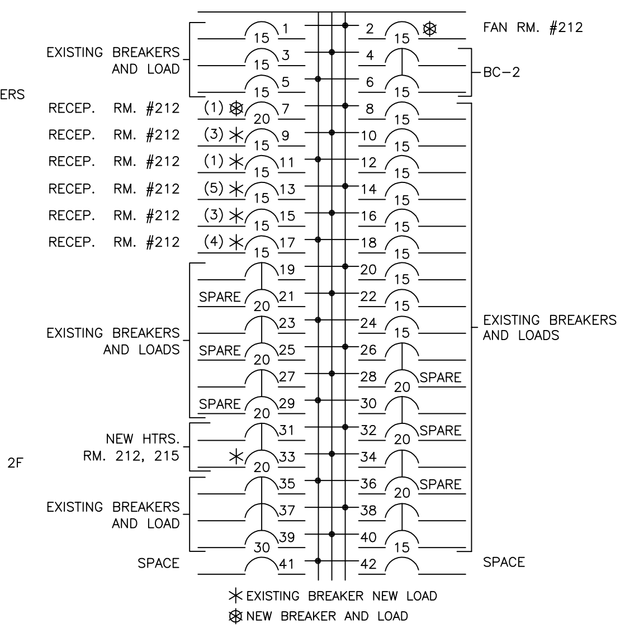

EXIST. PANEL '3D'

PNL. LOCATION	3RD FL WING
VOLTAGE	120/208V
PHASE	3ø, 4W
POLES	66
RATING AMPS	225A
TRIM	FLUSH
MAIN BKR	N/R
BRANCH BKRS	BOLT ON

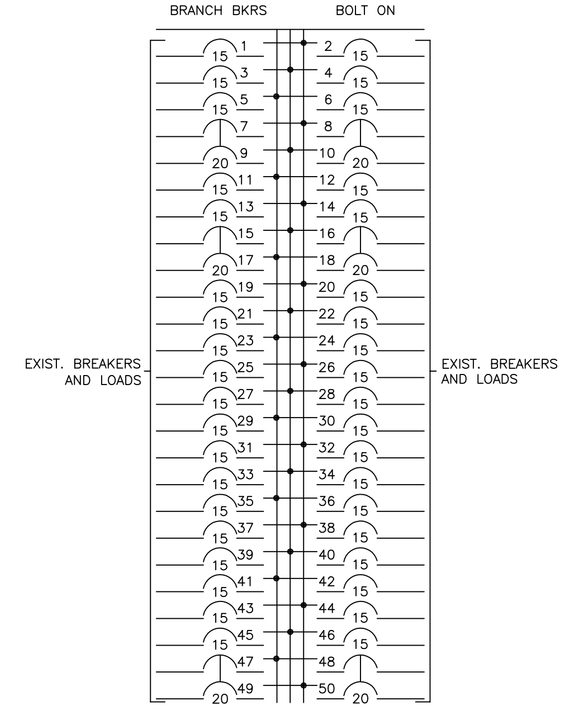

EXIST. PANEL

PNL. LOCATION	2ND FL WING BESIDE '2F'
VOLTAGE	120/208V
PHASE	3ø, 4W
POLES	42
RATING AMPS	225A
TRIM	FLUSH
MAIN BKR	N/R
BRANCH BKRS	BOLT ON

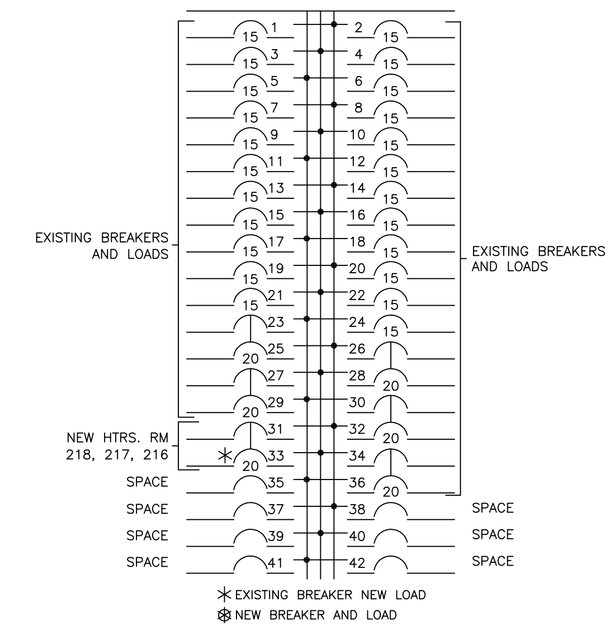

EXIST. PANEL '2F'

PNL. LOCATION	2ND FL WING
VOLTAGE	120/208V
PHASE	3ø, 4W
POLES	24
RATING AMPS	125A
TRIM	FLUSH
MAIN BKR	N/R
BRANCH BKRS	BOLT ON

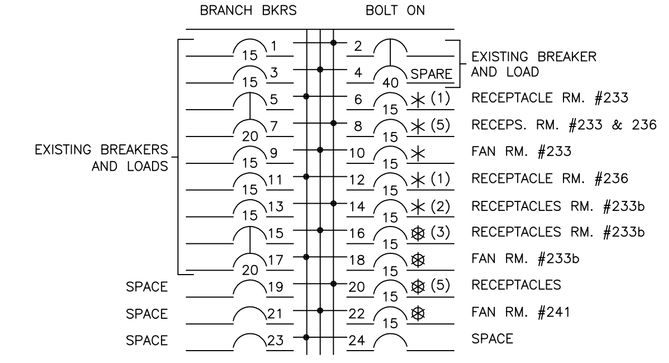

EXIST. PANEL '2G'

PNL. LOCATION	2ND FL WING
VOLTAGE	120/208V
PHASE	3ø, 4W
POLES	24
RATING AMPS	125A
TRIM	FLUSH
MAIN BKR	N/R
BRANCH BKRS	BOLT ON

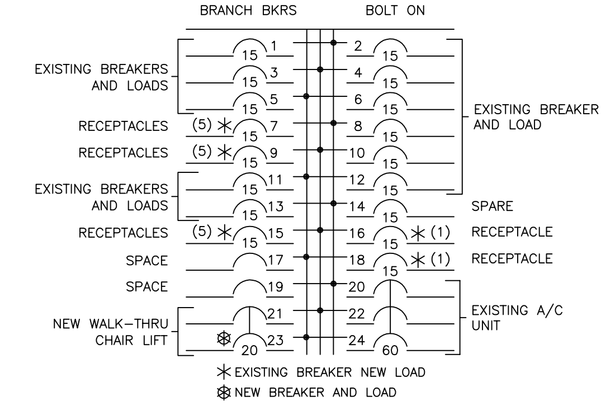

ALL LIGHT SWITCHES TO BE MOUNTED 1100mm AFF. – 1100mm HEIGHT TAKEN FROM TOP OF FINISH FLOOR LEVEL "AFF" TO CENTER OF OUTLET BOX.

ALL F/A FULL STATIONS TO BE MOUNTED 1200mm AFF. – 1200mm HEIGHT TAKEN FROM TOP OF FINISH FLOOR LEVEL "AFF" TO CENTER OF OUTLET BOX.

EXACT LOCATION OF EQUIPMENT SUBJECTED TO COORDINATION WITH MECHANICAL

ALL EMPTY CONDUIT TO BE C/W PULL ROPE.

GENERAL NOTES:

QUADRANT
ENGINEERING LIMITED, CONSULTING ENGINEERS
107 PRETORIA AVE., OTTAWA, ONTARIO, K1S 1W9
TEL. (613) 567-1487 FAX. (613) 567-1493
E-Mail: mail@quadrantengineering.ca

No.	DATE	REVISION	BY
06	JULY 20/15	ISSUED FOR PRICING	BL
05	JUN 22/15	PROGRESS ISSUE	BL
04	JUN 15/15	PROGRESS ISSUE	RL
03	JUN 03/15	ISSUED FOR REVIEW	RL
02	APR 16/15	RE-ISSUED FOR PERMIT	RL
01	DEC 23/14	ISSUED FOR PERMIT	BL

SJL
S. J. LAWRENCE
ARCHITECT INCORPORATED
18 Deakin St. Suite 205, Ottawa, ON. K2E 8B7
Tel: (613) 739-7770 Fax: (613) 739-7703
Email: sjl@sjlarchitect.com

DRAWN BY: BL & RL	DESIGNED BY: JM
DATE: MAR '14	JM
SCALE: AS NOTED	PLOT DATE: MARCH 18, 2014

PROJECT:
SOUTHWAY INN
RETRO-FIT
RETIREMENT HOME

JOB NO.: QEL14-021

DRAWING NAME:
PANEL DETAILS
SHEET 2

VERSION:

SHEET: E24

DATE: