Customer:
McGonigal Construction

Project:
The Meridian

Colour: Grey

Finish: Smooth

Mark	Length	Width	Qty	Mold Details	
A1	1393	115	3		W40 ✓
A2	2619	115	2	split sill in two pcs	W44 ✓
A3	2155	115	2	split sill in two pcs	W43 ✓
A4	2720	115	2	split sill in two pcs	W45 ✓
A5	2263	115	2	split sill in two pcs	W46 ✓
A6	2193	115	1	split sill in two pcs	W42 ✓

Concrete:
- ultimate 28 day compressive strength fc' shall not be less than 35MPa
- stripping compressive strength shall not be less than 10MPa
- durability shall be class of exposure F2
- maximum aggregate size of 14 mm.
- maximum water/cement ratio of 0.45
- air entrainment of 5-7%
- reinforcing steel shall be deformed steel bars having a minimum yield strength of 400MPa conforming to CSA G30.18
- all concrete work shall conform to CSA-A23.1, A23.2, A23.3 and A23.4
- minimum cover on rebar shall be as shown on the drawing but must not be ANY LESS THAN 17mm (11/16")
- all tolerances according to CSA A23.4-09 Clause 12

Design Loads:
- self weight only

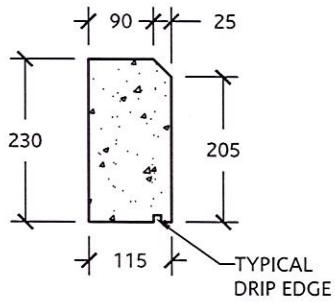

SECTION A

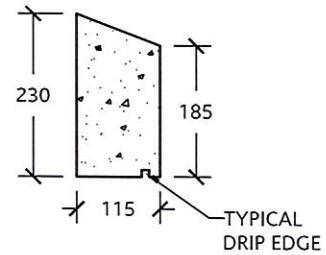

SECTION B

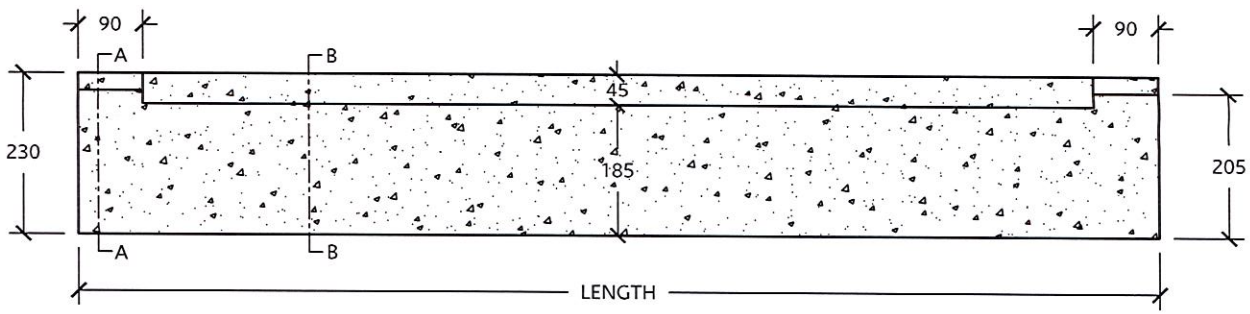

ELEVATION VIEW

✓Reviewed by TAL-co (FB)- 04 July, 2019

ED'S CONCRETE PRODUCTS

Piece: Type 1a Band

Date: 7/4/19

Scale: As Noted

Customer:
McGonigal Construction

Project:
The Meridian

Colour: Grey

Finish: Smooth

Mark	Length	Width	Qty	Mold Details
B1	380	115	4	
B2	560	115	4	
B3	715	115	2	
B4	850	115	2	
B5	940	115	2	
B6	1515	115	15	

McGonigal to site measure.

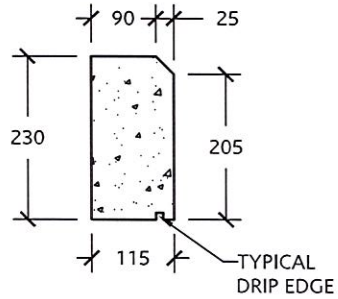

SECTION VIEW

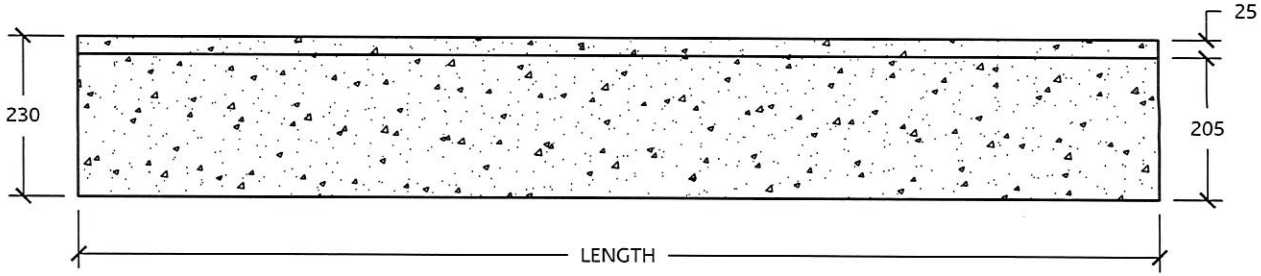

ELEVATION VIEW

Concrete:
- ultimate 28 day compressive strength fc' shall not be less than 35MPa
- stripping compressive strength shall not be less than 10MPa
- durability shall be class of exposure F2
- maximum aggregate size of 14 mm.
- maximum water/cement ratio of 0.45
- air entrainment of 5-7%
- reinforcing steel shall be deformed steel bars having a minimum yield strength of 400MPa conforming to CSA G30.18
- all concrete work shall conform to CSA-A23.1, A23.2, A23.3 and A23.4
- minimum cover on rebar shall be as shown on the drawing but must not be ANY LESS THAN 17mm (11/16")
- all tolerances according to CSA A23.4-09 Clause 12

Design Loads:
- self weight only

ED'S CONCRETE PRODUCTS

Piece: Type 1b Band

Date: 7/4/19

Scale: As Noted

Customer:	Project:
McGonigal Construction	The Meridian

Colour:	Finish:
Grey	Smooth

Mark	Length 1	Length 2	Qty	Mold Details
C1	470	470	2	
C2	480	195	1	
C3	195	480	1	

McGonigal to site measure & confirm lengths.

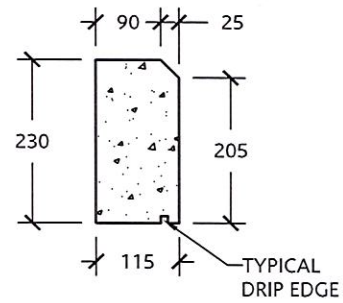

SECTION VIEW

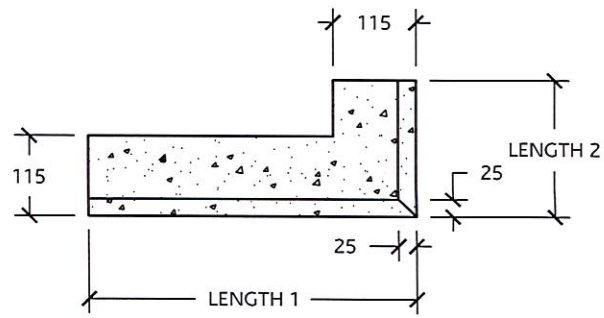

PLAN VIEW

Concrete:
- ultimate 28 day compressive strength fc' shall not be less than 35MPa
- stripping compressive strength shall not be less than 10MPa
- durability shall be class of exposure F2
- maximum aggregate size of 14 mm.
- maximum water/cement ratio of 0.45
- air entrainment of 5-7%
- reinforcing steel shall be deformed steel bars having a minimum yield strength of 400MPa conforming to CSA G30.18
- all concrete work shall conform to CSA-A23.1, A23.2, A23.3 and A23.4
- minimum cover on rebar shall be as shown on the drawing but must not be ANY LESS THAN 17mm (11/16")
- all tolerances according to CSA A23.4-09 Clause 12

Design Loads:
- self weight only

EDS CONCRETE PRODUCTS	Piece: Type 1c Band	Date: 7/4/19
		Scale: As Noted

Customer:
McGonigal Construction

Project:
The Meridian

Colour: Grey

Finish: Smooth

Mark	Length	Width	Qty	Mold Details
CA	570	570	~~4~~ 2	@ East

(*) 2 @ West to be confirmed separately in a sketch.

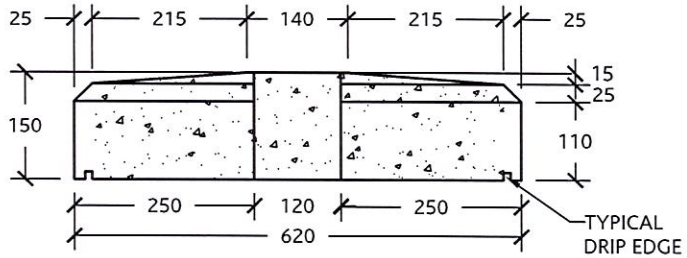

SECTION VIEW

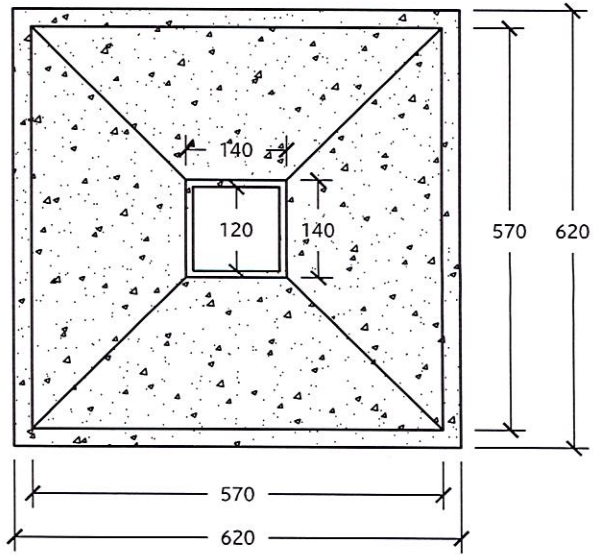

PLAN VIEW

Concrete:
- ultimate 28 day compressive strength fc' shall not be less than 35MPa
- stripping compressive strength shall not be less than 10MPa
- durability shall be class of exposure F2
- maximum aggregate size of 14 mm.
- maximum water/cement ratio of 0.45
- air entrainment of 5-7%
- reinforcing steel shall be deformed steel bars having a minimum yield strength of 400MPa conforming to CSA G30.18
- all concrete work shall conform to CSA-A23.1, A23.2, A23.3 and A23.4
- minimum cover on rebar shall be as shown on the drawing but must not be ANY LESS THAN 17mm (11/16")
- all tolerances according to CSA A23.4-09 Clause 12

Design Loads:
- self weight only

EDS CONCRETE PRODUCTS

Piece: Type 3 Cap

Date: 7/4/19

Scale: As Noted