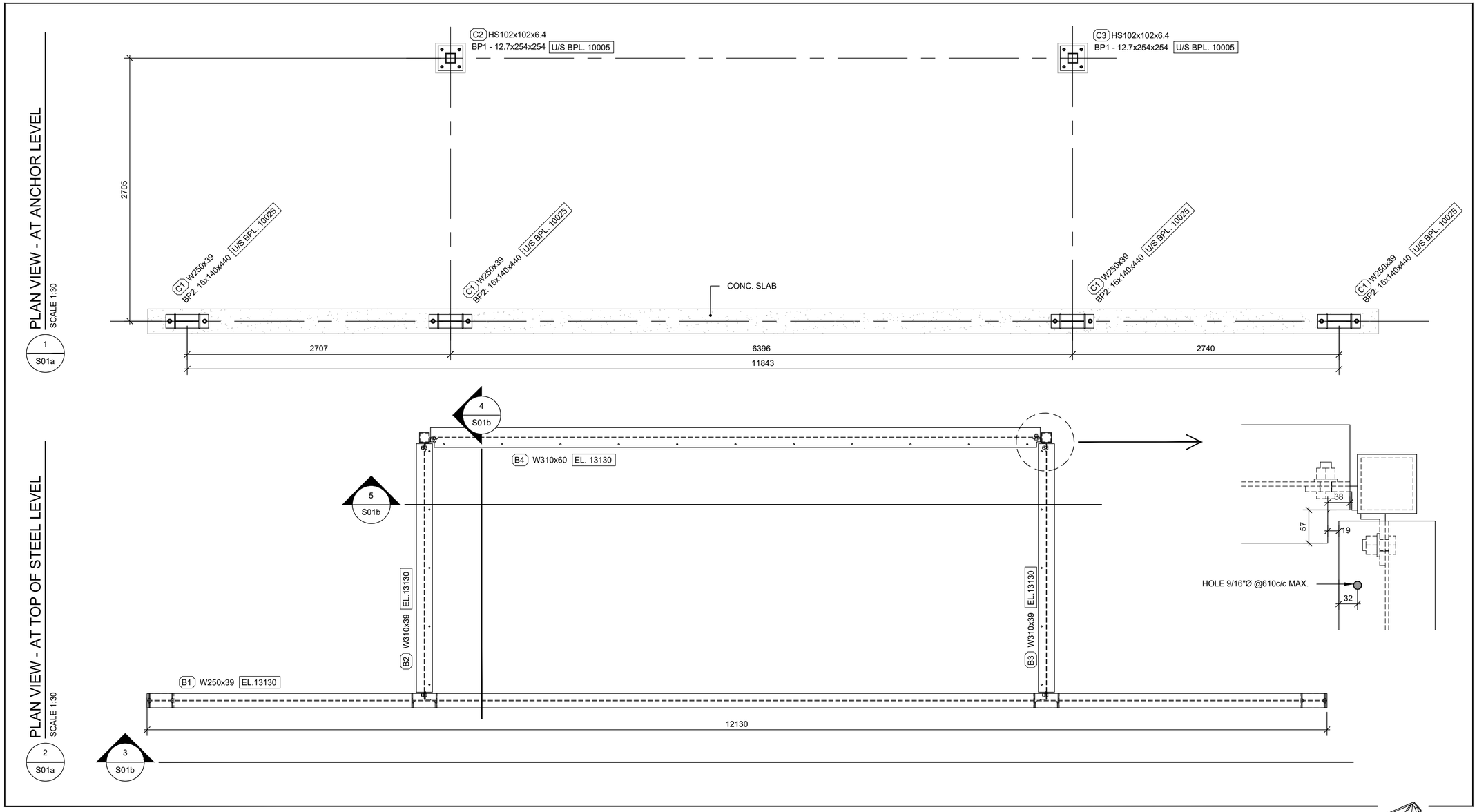

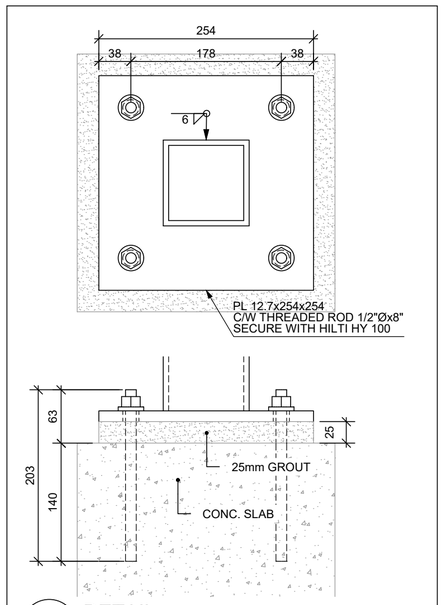

BP1 S01a DETAIL
SCALE 1:5

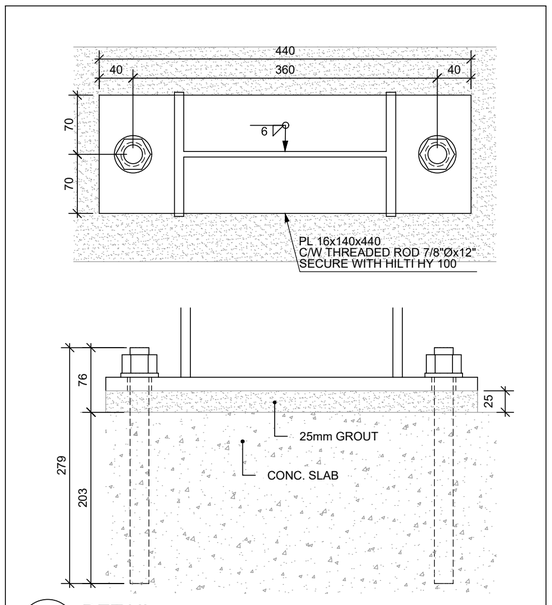

BP2 S01a DETAIL
SCALE 1:5

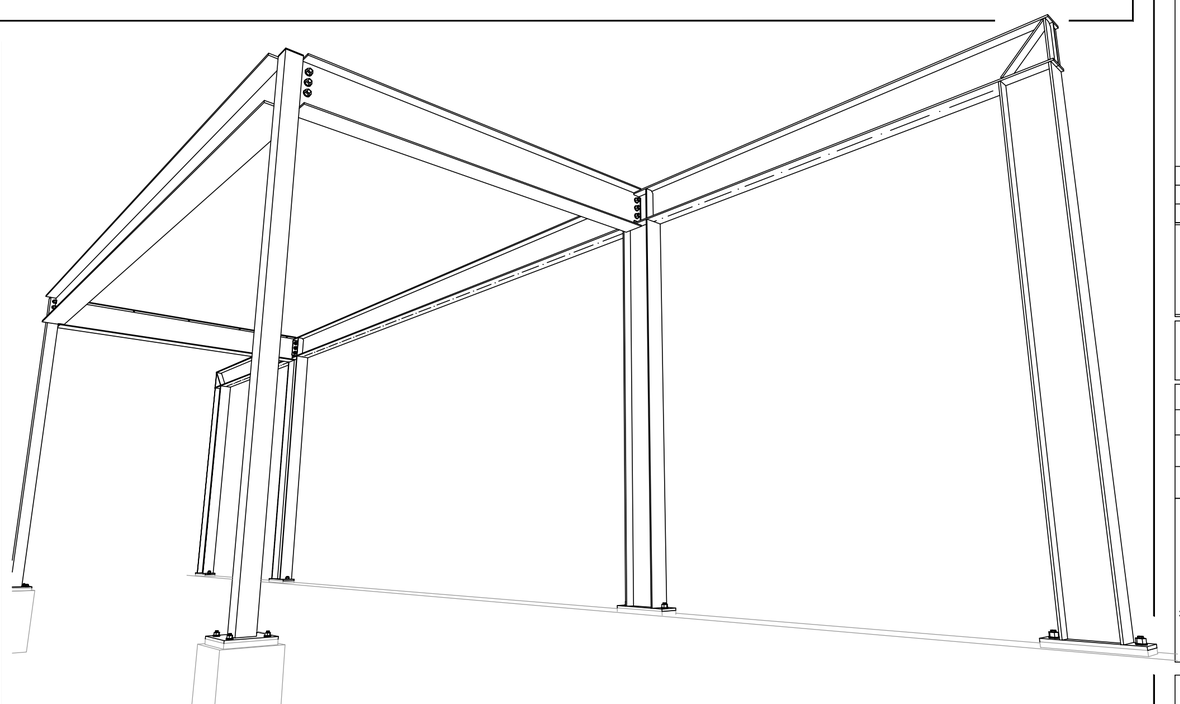

GENERAL NOTES

MATÉRIALS: UNLESS NOTED OTHERWISE
- HSS = A500 (GRADE C) / G40.21M 350W [SQUARE/REC. 345MPa ROUND 317 MPa]
- BEAM "W" = G40.21M 350W
- ALL OTHERS STEEL = G40.21M 300W

WELDING STANDARD:
- STEEL = CSA W47.1/W59
- ALUMINIUM = CSA W47.2/W59.2

CONNECTOR: UNLESS NOTED OTHERWISE
- STRUCTURAL BOLT = ASTM A325
- NONSTRUCTURAL BOLT = ASTM A307
- THREADED ROD = ASTM A307
- NELSON STUDS = AC 1020
- REBAR = G40.21M 400W

MATÉRIALS / COATING:
- STEEL / PRIMED

LEGEND:

T.O.S	TOP OF STEEL
U/S	UNDER SIDE
BPL	BASEPLATE
TBC	TO BE CONFIRMED
TYP	TYPIQUE
EL	ELEVATION
CONC	CONCRETE
C/W	COMPLETE WITH

REVIEWED RGC
NOT REVIEWED
AMEND AS NOTED
REVISE & RESUBMIT
DATE: 11-SEPT-2019

Review indicates general conformance with structural requirements only.

GOODEVE STRUCTURAL INC.

FORMAT: 18"x24"

REV.	Date	Description
0	2019-06-28	ISSUED FOR APPROVAL
E	2019-07-04	ERECTION PLAN

Projet: No. Projet: 72062_01

MERIDIAN PLACE

Titre: CANOPY

Client : TAL-CO
Détaillé par : S.LACHAPELLE
Vérifié par :
Gérant de projet : M.LAUZON

Sceau :

2019-08-30

SOUDURE MARC MARINE WELDING
LES RÉPARATIONS MARC MARINE INC.
819 BOUL. MALONEY EST
GATINEAU, QUÉBEC
T: 819.643.9104 F: 819.643.1908
RBQ: 8318-2642-33
LIEN VERS SITE WEB ICI

Révision : E

No. Page : S01a

FORMAT - 18"x24" : 2019-04-20 | IL:\MMA-GAT-TS\PARTAGE\DOSSIERS COMMUNS-DESSINS & CONCEPTION\72062_TALCO_MERIDIAN PLACE COMMUNITY CENTRE\03_DESSINS DATELIER\01_CANOPY\001_DWG (ACTIF)\72062_01\DETAILS\GA SHEET S01A-E.DWG

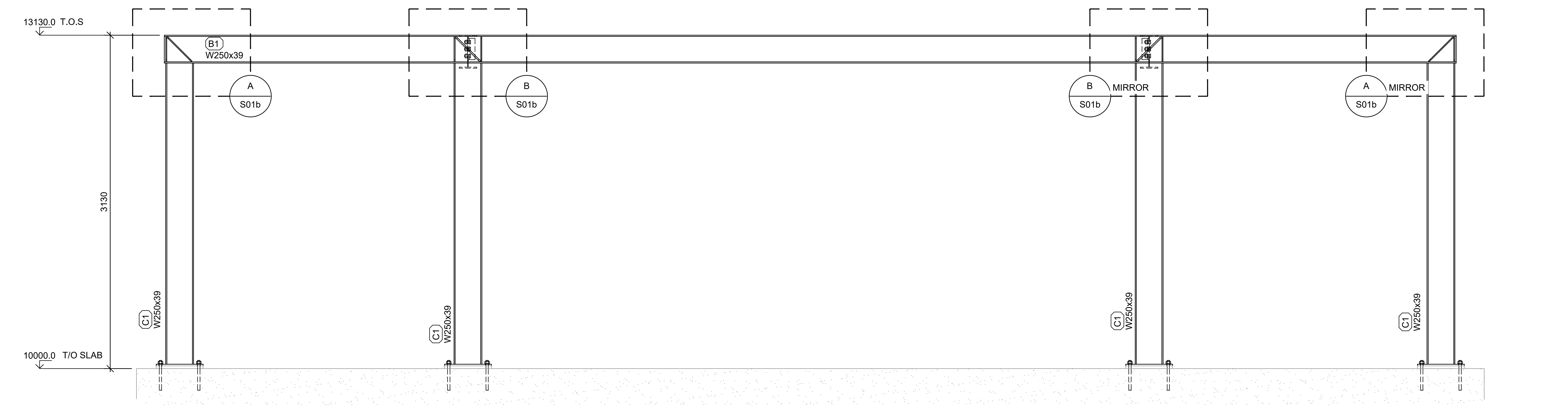

3 / S01a **ELEVATION**
SCALE 1:30

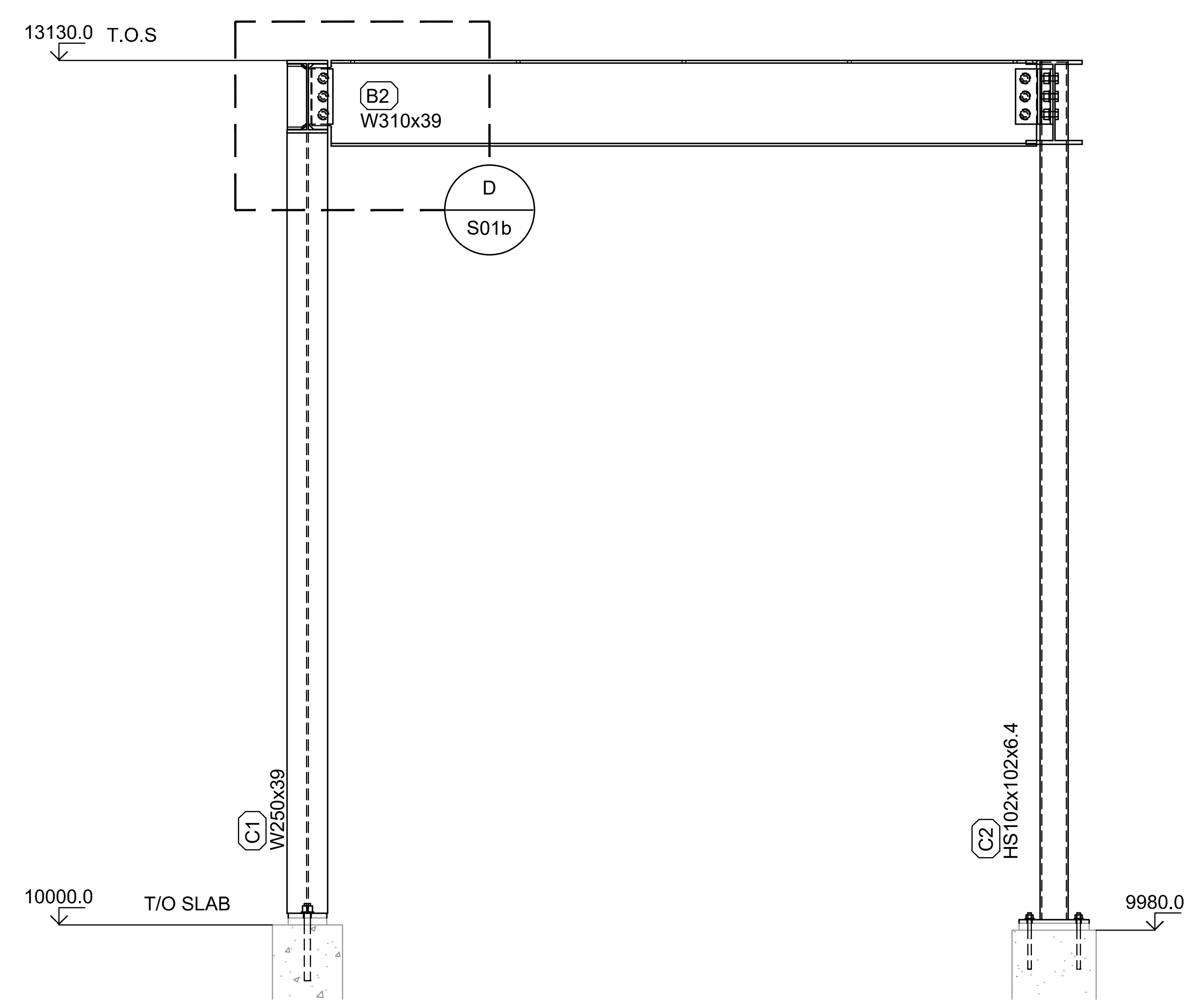

4 / S01a **ELEVATION**
SCALE 1:25

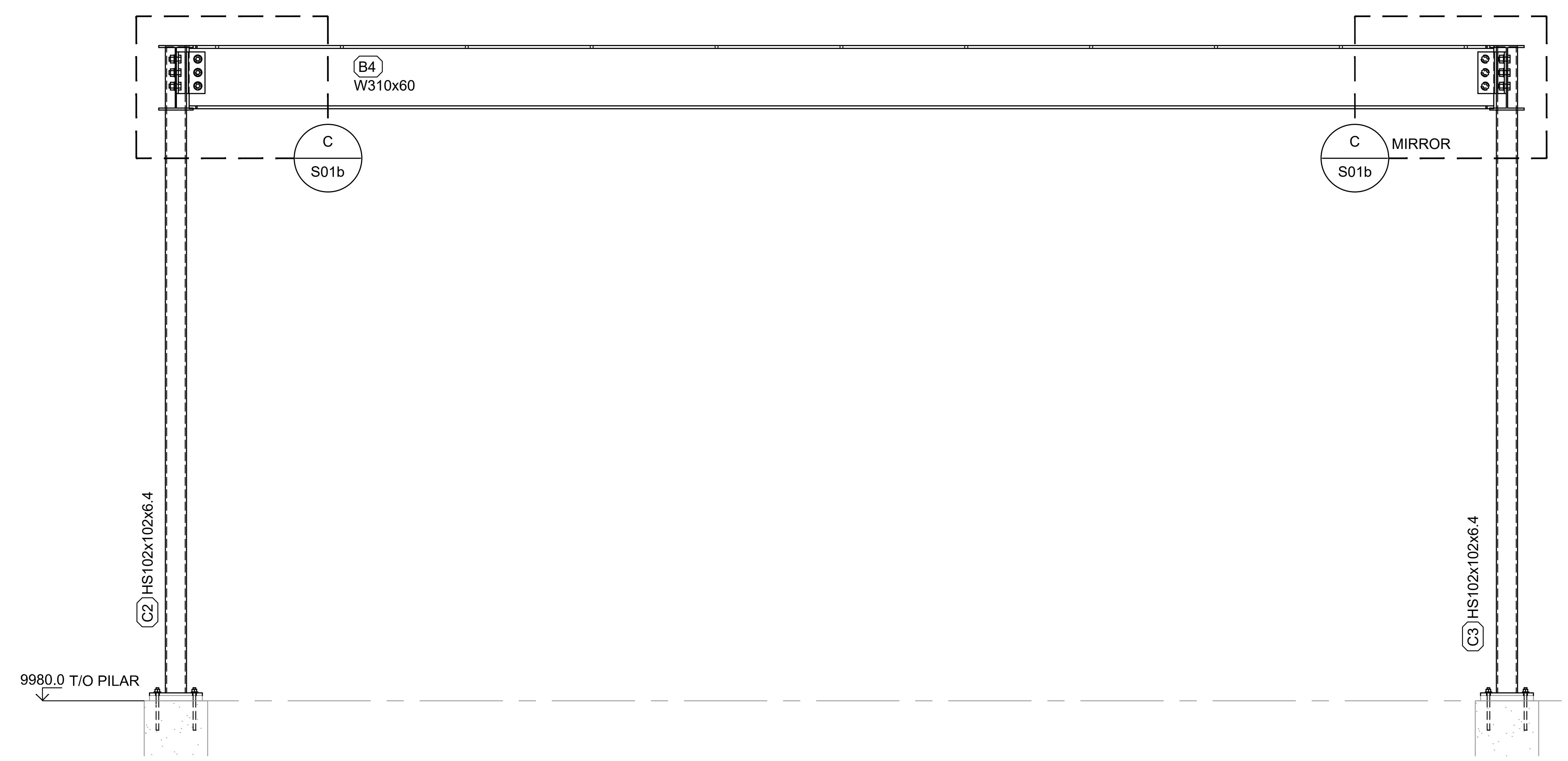

5 / S01a **ELEVATION**
SCALE 1:25

DESIGN FOR Mr > 123 kN*M

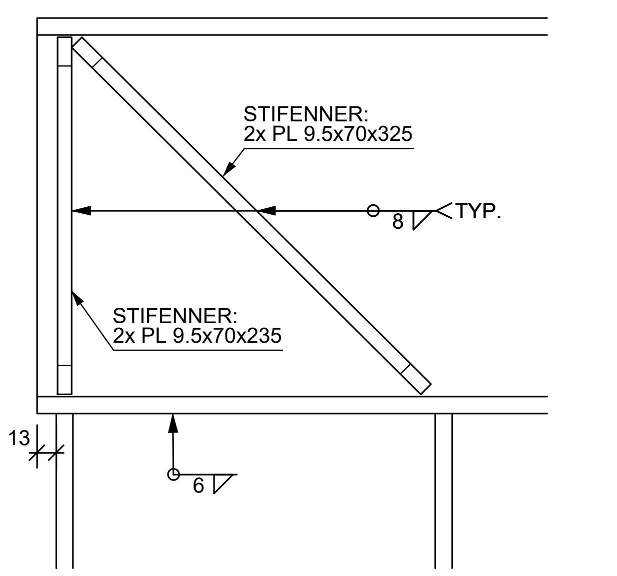

A / S01b **DETAIL**
SCALE 1:5

DESIGN FOR Mr > 123 kN*M

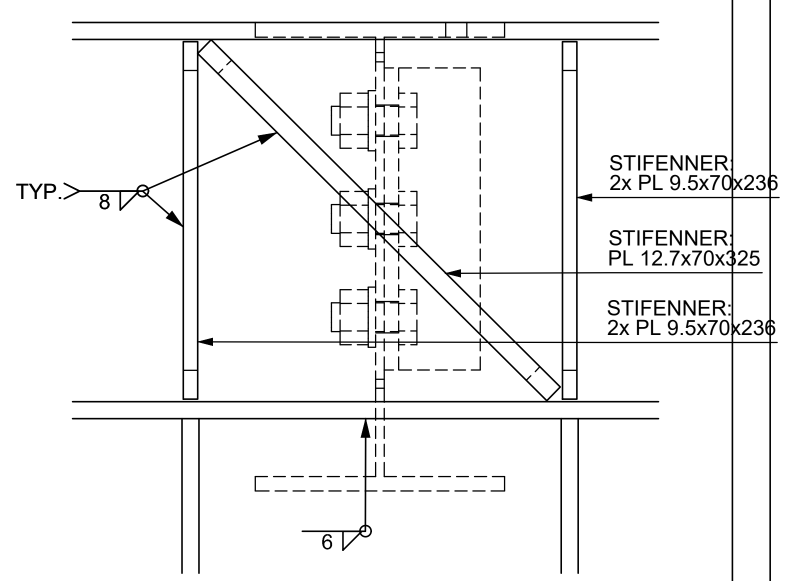

B / S01b **DETAIL**
SCALE 1:5

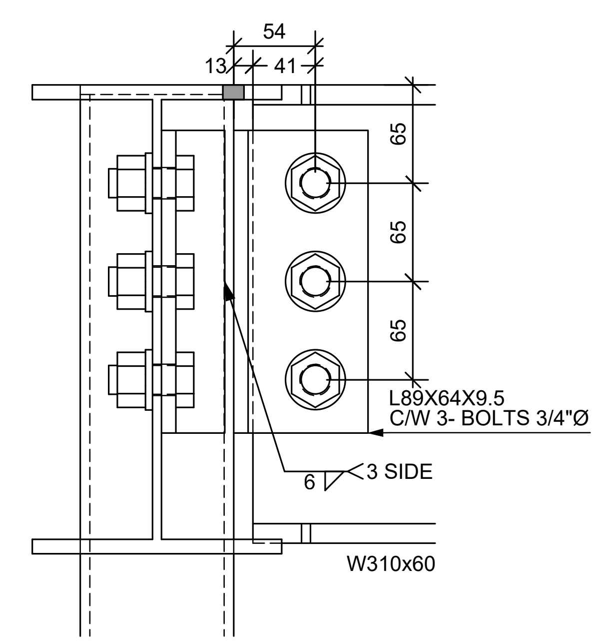

C / S01b **DETAIL**
SCALE 1:5

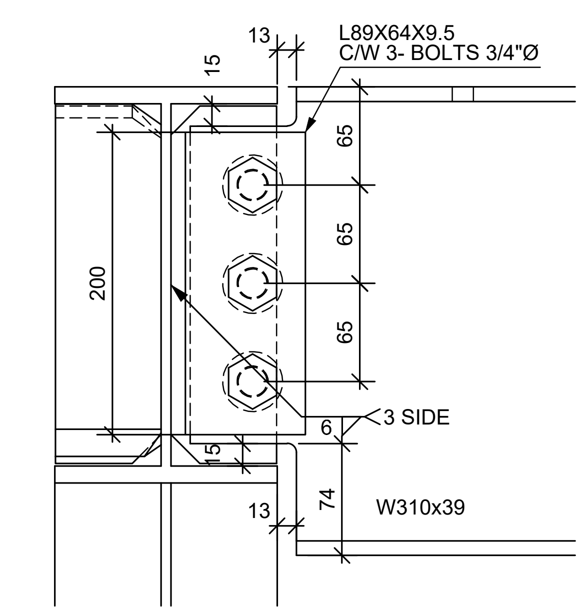

D / S01b **DETAIL**
SCALE 1:5

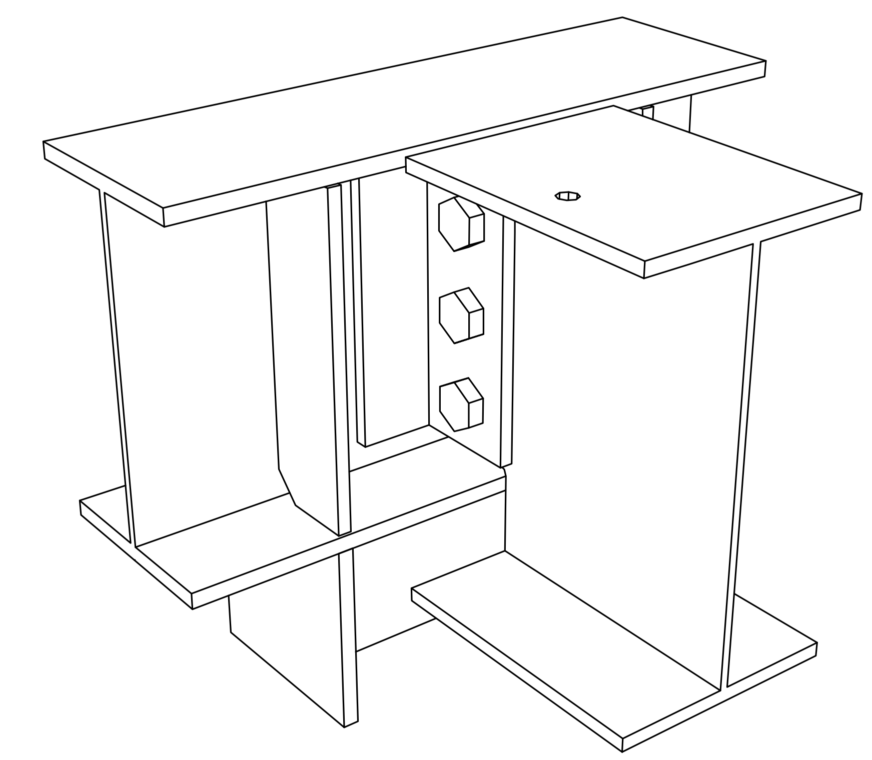

LEGEND:

T.O.S	TOP OF STEEL
U/S	UNDER SIDE
BPL	BASEPLATE
TBC	TO BE CONFIRMED
TYP	TYPIQUE
EL	ELEVATION
CONC	CONCRETE
C/W	COMPLETE WITH

REVIEWED RGC
NOT REVIEWED
AMEND AS NOTED
REVISE & RESUBMIT
DATE: 11-SEPT-2019
Review indicates general conformance with structural requirements only.
GOODEVE STRUCTURAL INC.

FORMAT: 18"x24"

REV.	Date	Description
0	2019-06-28	ISSUED FOR APPROVAL
E	2019-07-04	ERECTION PLAN

Projet: MERIDIAN PLACE
No. Projet: 72062_01

Titre: CANOPY

Client : TAL-CO
Détaillé par : S.LACHAPELLE
Vérifié par :
Gérant de projet : M.LAUZON

Sceau :
LICENSED PROFESSIONAL ENGINEER J. LANDRY 100224602 PROVINCE OF ONTARIO
2019-08-30

SOUDURE MARC MARINE WELDING
LES RÉPARATIONS MARC MARINE INC.
819 BOUL. MALONEY EST
GATINEAU, QUÉBEC
T: 819.643.9104 F: 819.643.1908
RBQ: 8318-2642-33
LIEN VERS SITE WEB ICI

Révision : E

No. Page : S01b

FORMAT - 18"x24" : 2018-04-20 / \\LRMM-GAT-TS\PARTAGE\DOSSIERS COMMUNS\-DESSINS & CONCEPTION -\72062_TALCO_MERIDIAN PLACE COMMUNITY CENTRE\03_DESSINS D'ATELIER\01_CANOPY\001_DWG (ACTIF)\72062_01\DETAILS\GA SHEET S01B-E.DWG