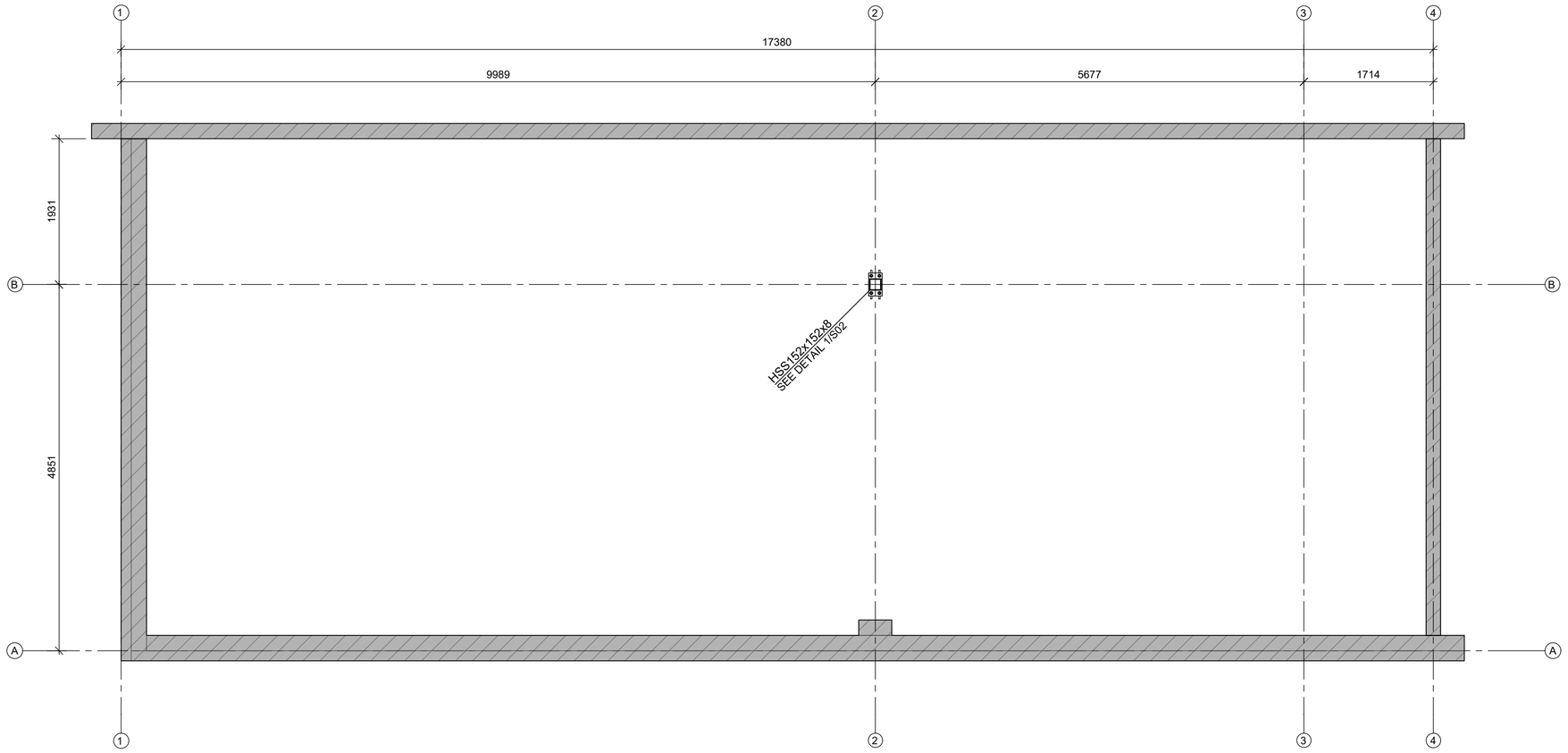

TOP VIEW
SCALE - 1:50

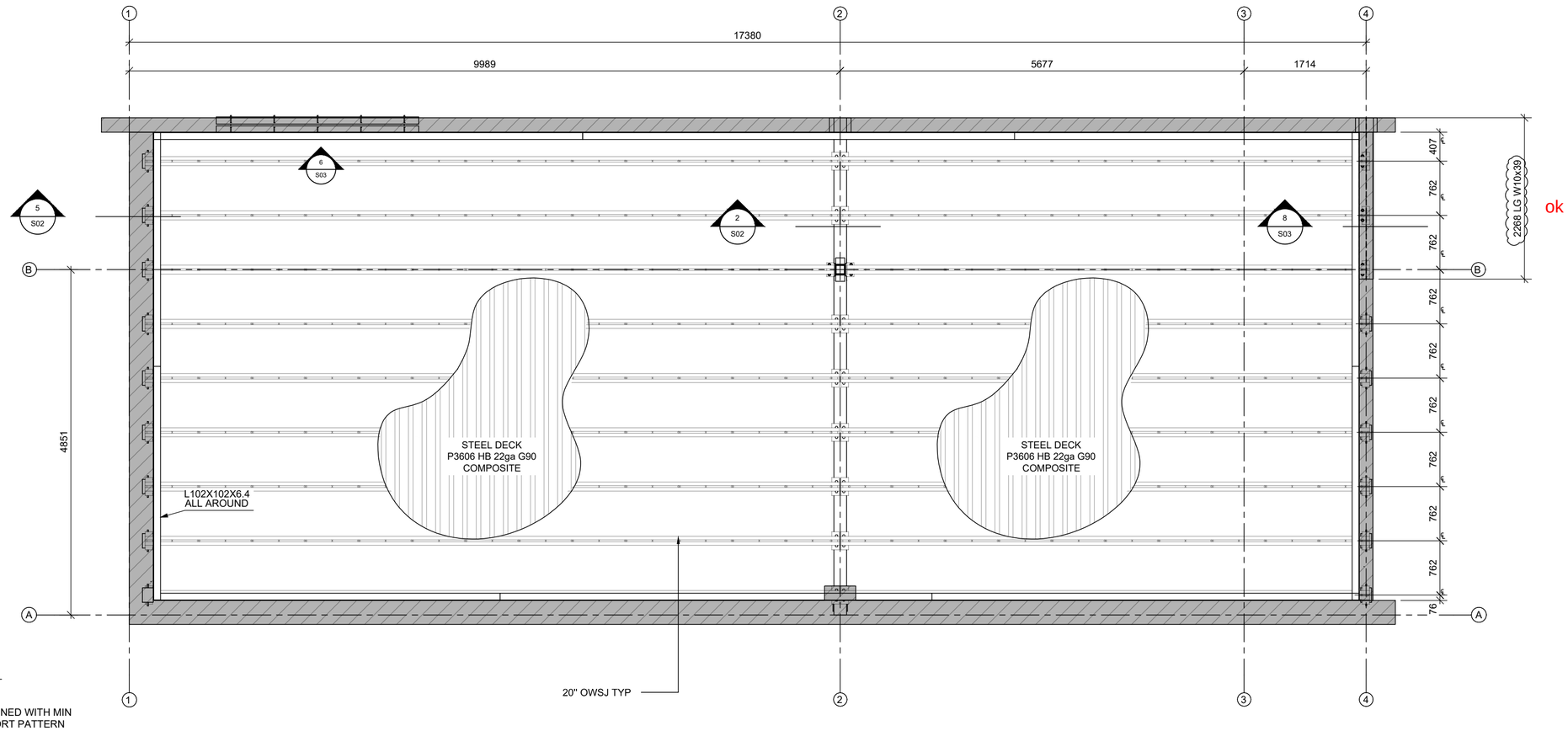

TOP VIEW
SCALE - 1:50

METAL DECK SHALL BE FASTENED WITH MIN 3/4 Ø PUDDLE WELD IN SUPPORT PATTERN 36/11. SIDE LAP FASTENING SHALL BE BUTTON PUNCHED AT 6" c.c. MAX

GENERAL NOTES

MATÉRIALS: UNLESS NOTED OTHERWISE
- HSS = A500 (GRADE C) / G40.21M 350W [SQUARE/REC. 345MPa ROUND 317 MPa]
- BEAM "W" = G40.21M 350W
- ALL OTHERS STEEL = G40.21M 300W

WELDING STANDARD:
- STEEL = CSA W47.1/W59
- ALUMINIUM = CSA W47.2/W59.2

CONNECTOR: UNLESS NOTED OTHERWISE
- STRUCTURAL BOLT = ASTM A325
- NONSTRUCTURAL BOLT = ASTM A307
- THREADED ROD = ASTM A307
- NELSON STUDS = AC 1020
- REBAR = G40.21M 400W

MATÉRIALS / COATING:
- STEEL / PRIMED

DRAWING REVIEW
The review of this drawing does not in any way relieve the Contractor of responsibility from its actions and compliance with the Contract Documents

ID: CARLETON PLACE ARENA		Contract #: 7558
X	No Comment	Submission #: 1
	Reviewed as Noted	Review By: SC
	Rejected See Remarks	Date: 2020-08-26

Comments:
1. Contractor to verify all dimensions prior to fabrication.
2. All work to the 2012 Ontario Building Code.
3. Refer to EEG drawings S0 to S6 for full notes and details.

EASTERN ENGINEERING GROUP INC.
Consulting Engineers, Brockville, ON
Tel: (613)345-0400, Fax: (613)345-0008
www.easteng.com

FORMAT: 18"x24"

REV.	Date	Description
0	2020-08-24	ISSUED FOR APPROVAL

Project: Project No.: 78900-04

CARLETONS PLACE ARENA

Title:
STRUCTURAL FLOOR & ROOF PLAN

Client : TAL-CO BUILDING INNOVATIONS LTD
Detailed by : J.J
Verified by : J.LANDRY
Project manager : ÉRIC MARINIER

Stamp :
2020-08-25

SOUDURE MARC MARINE WELDING
LES RÉPARATIONS MARC MARINE INC.
819 BOUL. MALONEY EST
GATINEAU, QUÉBEC
T: 819.643.9104 F: 819.643.1908
RBQ: 8318-2642-33
LIEN VERS SITE WEB ICI

Révision : 0

Page No. : S01

FORMAT - 18"x24" : 2019-04-20 / X:\DOSSIERS COMMUNS- DESSINS & CONCEPTION -78900_TALCO_CARLETON PLACE ARENA\03_DESSINS DATELIER\04-XDST\001_DWG (ACTIF)\78900-04\DETAILS\GA SHEET 1-0.DWG

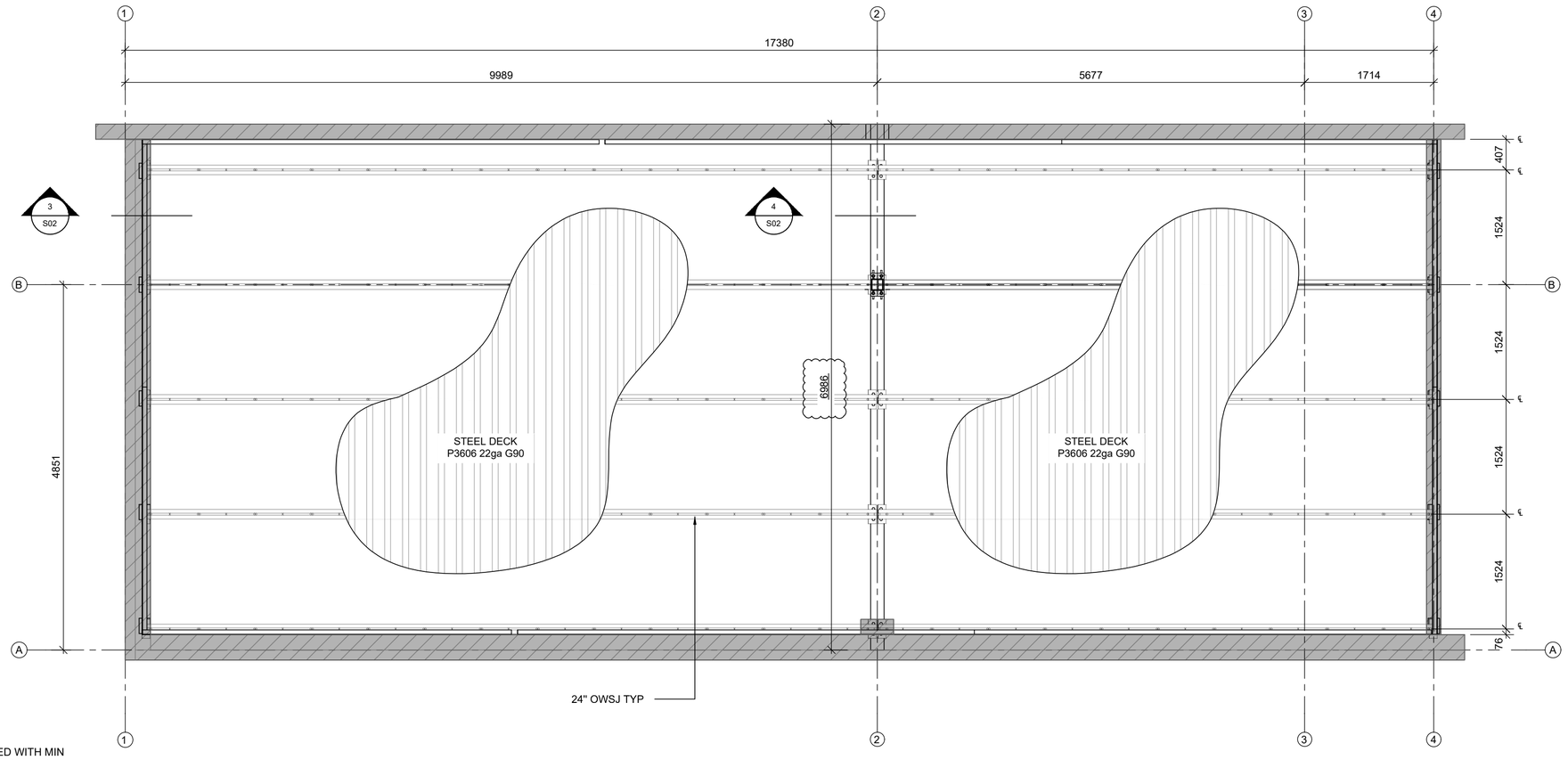

TOP VIEW

SCALE - 1:50

METAL DECK SHALL BE FASTENED WITH MIN 3/4 Ø PUDDLE WELD IN SUPPORT PATTERN 36/11. SIDE LAP FASTENING SHALL BE BUTTON PUNCHED AT 6" c.c. MAX

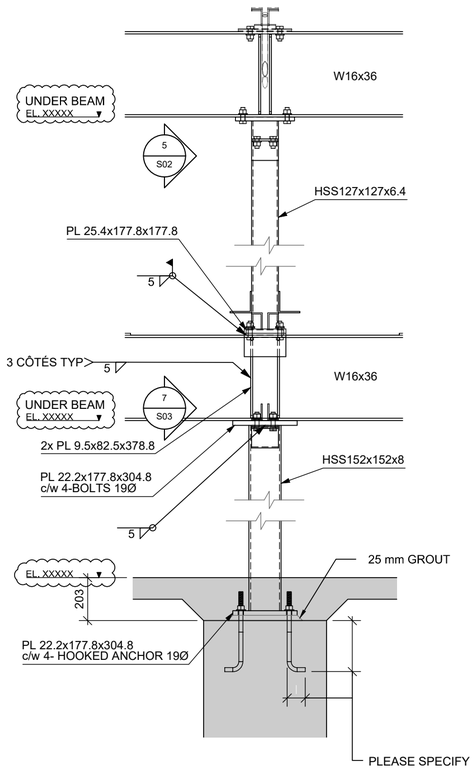

1 S01 COLUMN DETAIIL

SCALE - 1:50

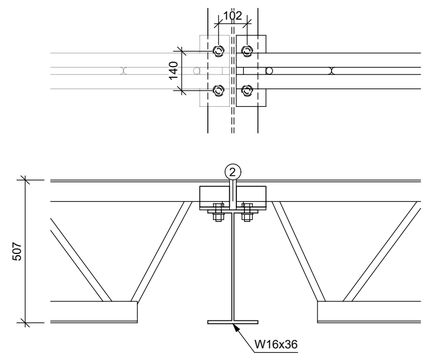

2 S01 JOIST CONNECTION

SCALE - 1:15

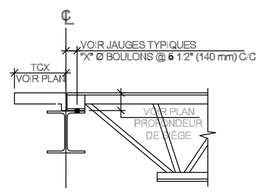

CANAM DETAIL

SCALE - N/A

POUTRELLE TYPE 1X

BOULONS NON FOURNIS PAR CANAM
(LE DIAMETRE DE BOULONS PREFERE DE CANAM POUR LES SIEGE DE POUTRELLE EST DE 3/4")

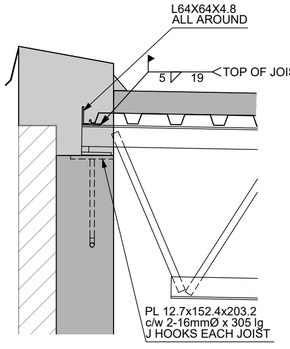

3 S02 JOIST CONNECTION

SCALE - 1:15

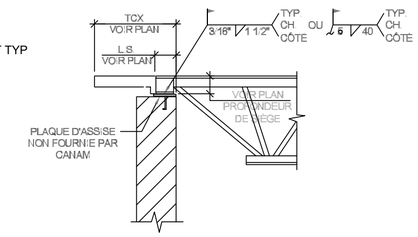

CANAM DETAIL

SCALE - N/A

POUTRELLE TYPE 17Y

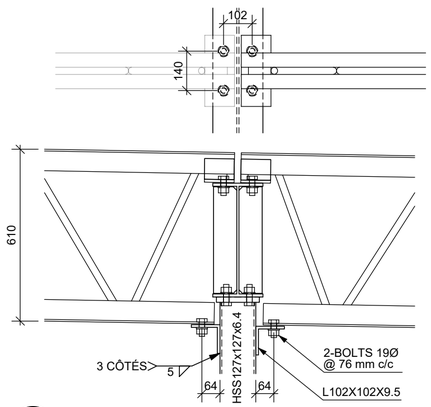

4 S02 JOIST CONNECTION

SCALE - 1:15

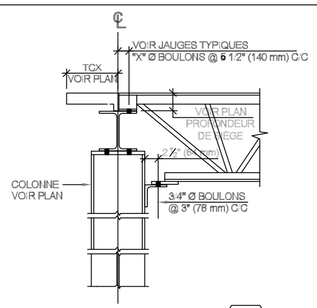

CANAM DETAIL

SCALE - N/A

POUTRELLE TYPE 6Y

BOULONS NON FOURNIS PAR CANAM
(LE DIAMETRE DE BOULONS PREFERE DE CANAM POUR LES SIEGE DE POUTRELLE EST DE 3/4")

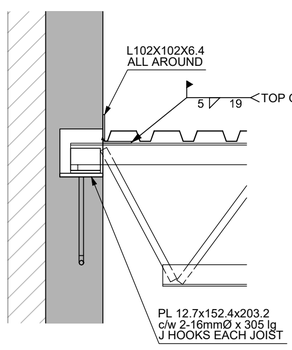

5 S01 JOIST CONNECTION

SCALE - 1:15

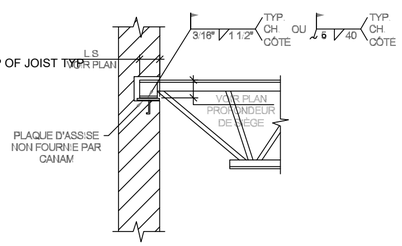

CANAM DETAIL

SCALE - N/A

POUTRELLE TYPE 17Z

GENERAL NOTES

MATÉRIALS: UNLESS NOTED OTHERWISE
- HSS = A500 (GRADE C) / G40.21M 350W [SQUARE/REC. 345MPa ROUND 317 MPa]
- BEAM "W" = G40.21M 350W
- ALL OTHERS STEEL = G40.21M 300W

WELDING STANDARD:
- STEEL = CSA W47.1/W59
- ALUMINIUM = CSA W47.2/W59.2

CONNECTOR: UNLESS NOTED OTHERWISE
- STRUCTURAL BOLT = ASTM A325
- NONSTRUCTURAL BOLT = ASTM A307
- THREADED ROD = ASTM A307
- NELSON STUDS = AC 1020
- REBAR = G40.21M 400W

MATÉRIALS / COATING:
- STEEL / PRIMED

FORMAT: 18"x24"

REV.	Date	Description
0	2020-08-24	ISSUED FOR APPROVAL

Project: Project No.: 78900-04

CARLETONS PLACE ARENA

Title:
STRUCTURAL FLOOR & ROOF PLAN

Client : TAL-CO BUILDING INNOVATIONS LTD

Detailed by : J.J

Verified by : J.LANDRY

Project manager : ÉRIC MARINIER

Stamp :

2020-08-25

SOUDURE MARC MARINE WELDING
LES RÉPARATIONS MARC MARINE INC.
819 BOUL. MALONEY EST
GATINEAU, QUÉBEC
T: 819.643.9104 F: 819.643.1908
RBQ: 8318-2642-33
LIEN VERS SITE WEB ICI

Révision : 0

Page No. : S02

FORMAT - 18"x24" - 2018-04-20 I:\DOSSIERS COMMUNS - DESSINS & CONCEPTION - 78900_TAL-CO_CARLETON PLACE ARENA\00_DESSINS D'ATELIER\04-JOIST\001_DWG\ACTIP78900-04-DETAILS-S04.DWG

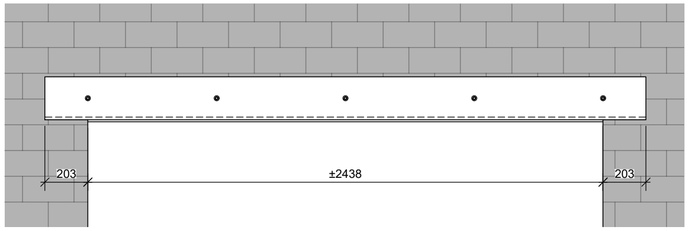

6
S01

JOIST CONNECTION
SCALE - 1:15

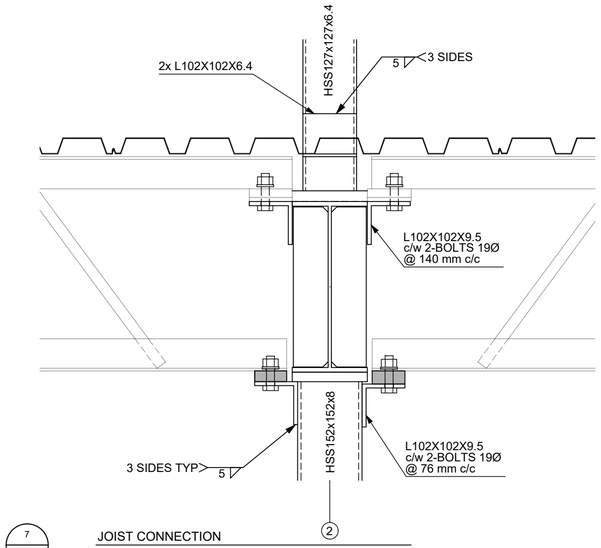

7
S02

JOIST CONNECTION
SCALE - 1:10

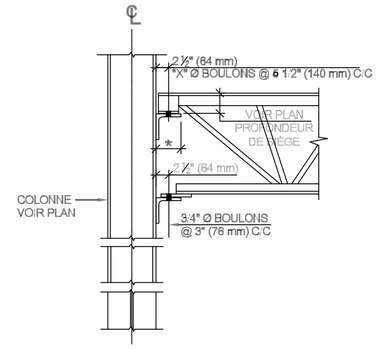

POUTRELLE TYPE 8Y

BOULONS NON FOURNIS PAR CANAM
(LE DIAMÈTRE DE BOULONS PRÉFÉRÉ DE CANAM POUR LES SIÈGE DE POUTRELLE EST DE 3/4".)

*** SI L'ANGLE DE SUPPORT EST PLUS GRAND QUE DE L4" X 4", AVISEZ CANAM**

CANAM DETAIL
SCALE - N/A

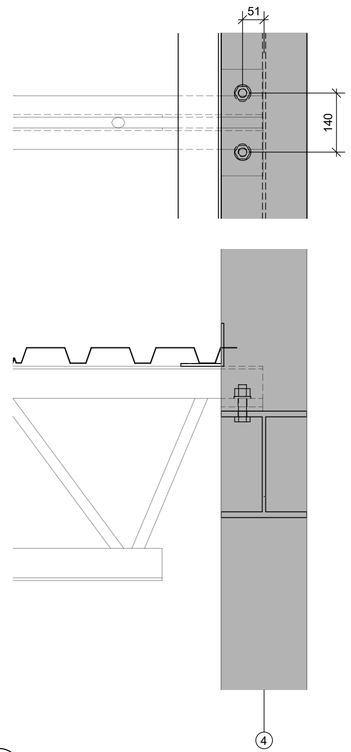

8
S01

JOIST CONNECTION
SCALE - 1:10

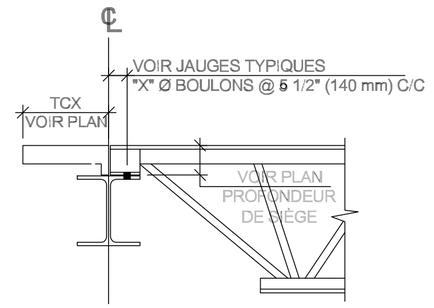

POUTRELLE TYPE 1X

BOULONS NON FOURNIS PAR CANAM
(LE DIAMÈTRE DE BOULONS PRÉFÉRÉ DE CANAM POUR LES SIÈGE DE POUTRELLE EST DE 3/4".)

CANAM DETAIL
SCALE - N/A

GENERAL NOTES

MATÉRIALS: UNLESS NOTED OTHERWISE
- HSS = A500 (GRADE C) / G40.21M 350W [SQUARE/REC. 345MPa ROUND 317 MPa]
- BEAM "W" = G40.21M 350W
- ALL OTHERS STEEL = G40.21M 300W

WELDING STANDARD:
- STEEL = CSA W47.1/W59
- ALUMINIUM = CSA W47.2/W59.2

CONNECTOR: UNLESS NOTED OTHERWISE
- STRUCTURAL BOLT = ASTM A325
- NONSTRUCTURAL BOLT = ASTM A307
- THREADED ROD = ASTM A307
- NELSON STUDS = AC 1020
- REBAR = G40.21M 400W

MATÉRIALS / COATING:
- STEEL / PRIMED

FORMAT: 18"x24"

REV.	Date	Description
0	2020-08-24	ISSUED FOR APPROVAL

Project: Project No.: 78900-04

CARLETONS PLACE ARENA

Title:
STRUCTURAL FLOOR & ROOF PLAN

Client : TAL-CO BUILDING INNOVATIONS LTD
Detailed by : J.J
Verified by : J.LANDRY
Project manager : ÉRIC MARINIER

Stamp :

2020-08-25

SOUDURE MARC MARINE WELDING
LES RÉPARATIONS MARC MARINE INC.
819 BOUL. MALONEY EST
GATINEAU, QUÉBEC
T: 819.643.9104 F: 819.643.1908
RBQ: 8318-2642-33
LIEN VERS SITE WEB ICI

Révision : 0

Page No. : S03

FORMAT - 18"x24" : 2019-04-20 / X:\DOSSIERS COMMUNS-DESSINS & CONCEPTION-78900_TALCO_CARLETON PLACE ARENA\03_DESSINS DATELIER\04-XOST\001_DWG [ACTIF]78900-04DETAILS\GA SHEET 1-0.DWG